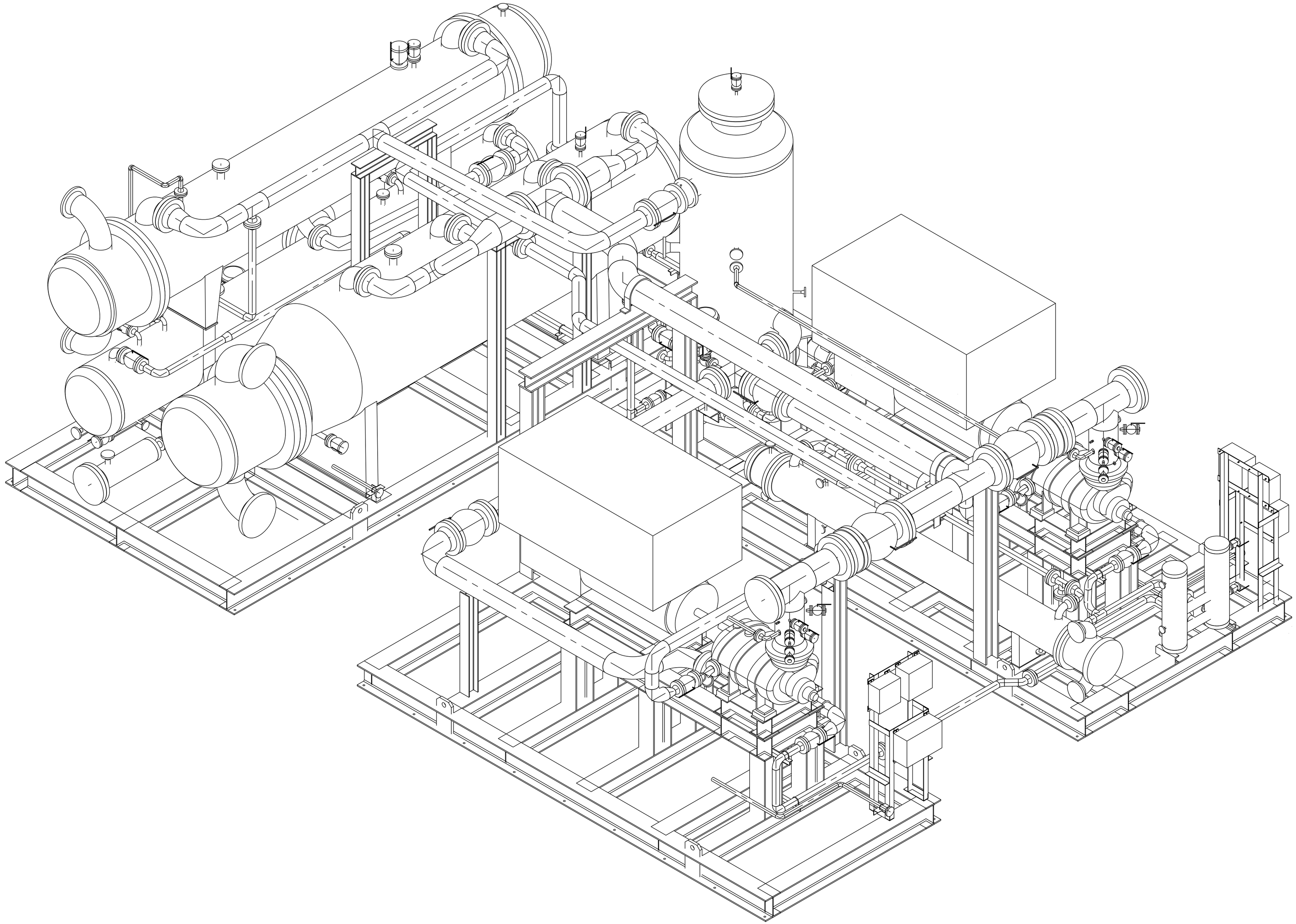

Code1	☐ No Comment/ Approved (Applicable Only for "FOR REVIEW" and "For Approval" Documents) No comment and the document are released for Manufacturing
Code2	☐ No Comment / Approved with Note(s) Vendor/Sub–Contractor shall correct, revise and resubmit the document. The document is released for Manufacturing if changes incorporated.
Code3	☐ Commented Vendor/Sub–Contractor shall correct, revise and resubmit the document by the date specified. The document shall be revised under the Status of "R: Revised Issue". All corrected documents shall be resubmitted before starting the Manufacturing Process
Code4	☐ Not Accepted (Rejected) Vendor/Sub–Contractor shall re–work/re–design/re–specify the contents of the document according to the comments/ reasons for rejection.All corrected documents shall be resubmitted before starting the manufacturing.Vendor Sub–Contractor shall not proceed with subsequent works of Material Supply or Manufacturing until receiving Code1/Code2 or No Code from PURCHASER. Vendor/Sub–Contractor shall resubmit the document with the same revision within 6 working days after receiving comments
No Code	☐ No Code (Only for "For Information" Documents and "As Built DWGs") Document has been submitted for PURCHASER's Information (FI). Consistancy completeness and correctness of document content is in Vendor/Sub–Contractor's responsibility.

The above checking result by EIED shall in no way relieve Vendor of any liability, obligation and responsibility out of the purchase order and the mutual agreement in writing

EIED

DATE :

DEPT:

Signature :

CV	PI	EL	IN	ME	MA
ST	BU	PR	SA	HV	TL

REV.	DATE (DD.MMM.YY)	Purpose of Issue	Prepared	Checked	Approved
00	15.06.2025	IFA	FA	IM	OG

GPI Gachsaran Polymer Industries Company

Gachsaran Ploymer Industries Company

HDPE Plant

CONTRACT NO.: GPI–CON–99–008

EIED

DELTA PROCESS EQUIPMENT

PO No.: xxxxx

SCALE: 1:1

DRAWING TITLE:

GENERAL ARRANGEMENT DRAWING

DRAWING NO.	REV.	SHEET NO.	SIZE
VD-GPIC-MA-3029- 0062		8 OF 9	A1

ULT003–20011–08

CADD–05