FRONT VIEW

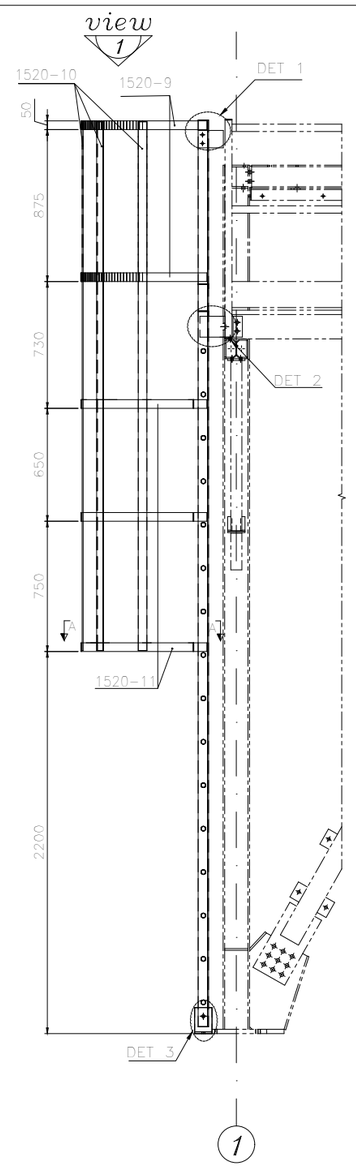

SIDE VIEW

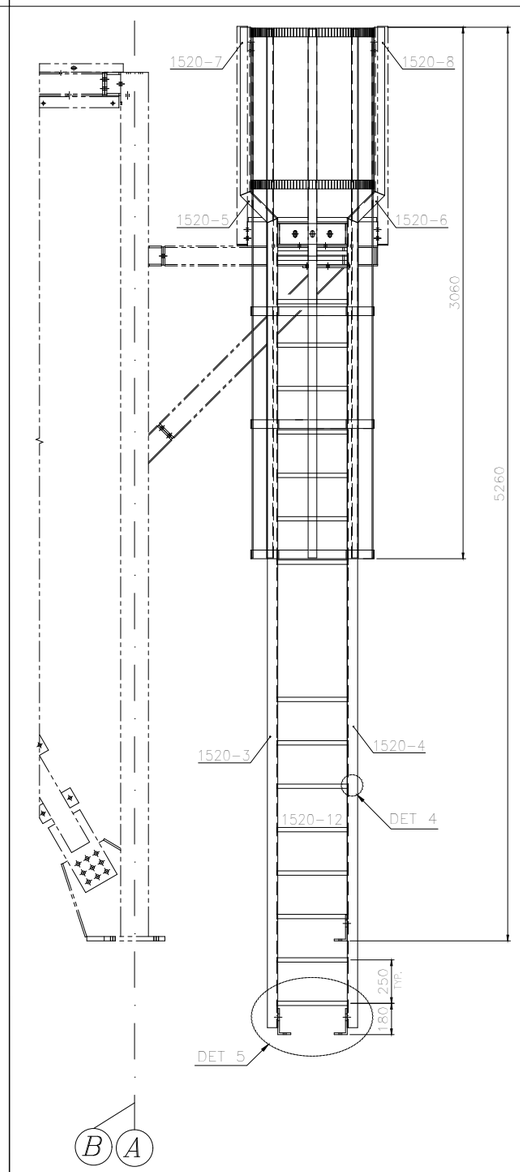

VIEW 1

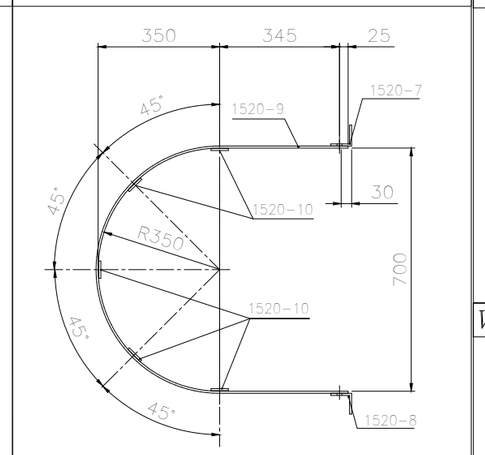

SEC A

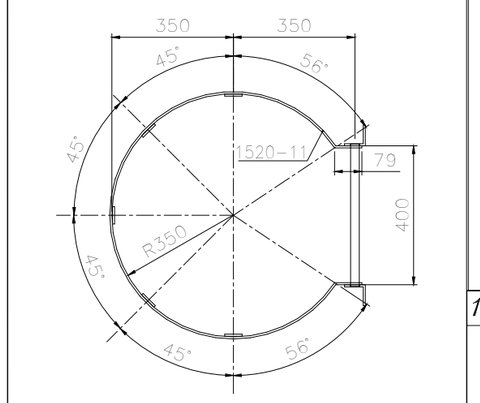

1520-1 THK.=10

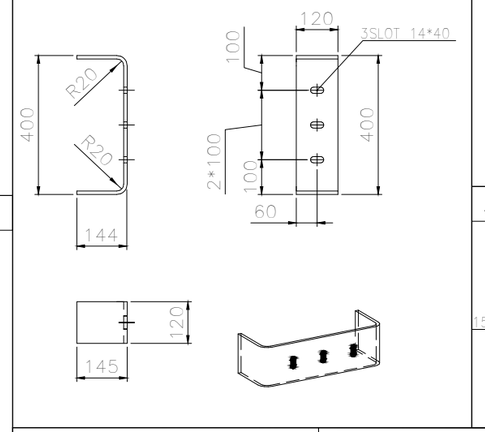

DET 2

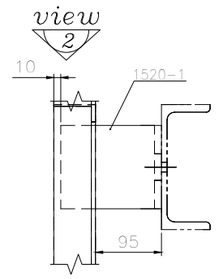

VIEW 2

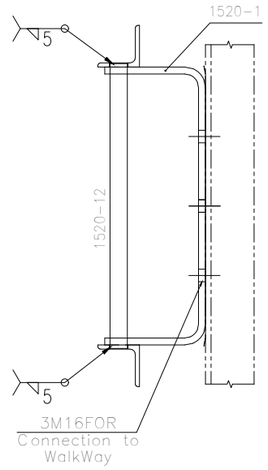

1520-2 THK.=10

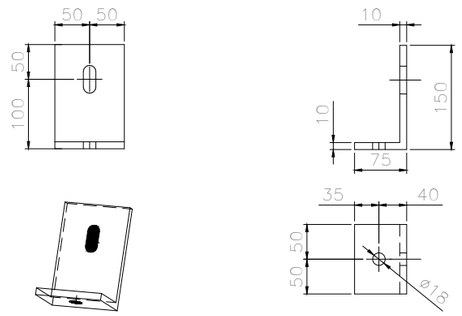

DET 1

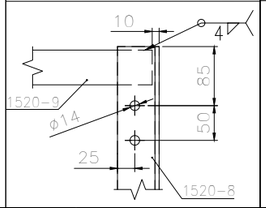

DET 4

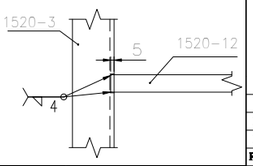

TOP VIEW

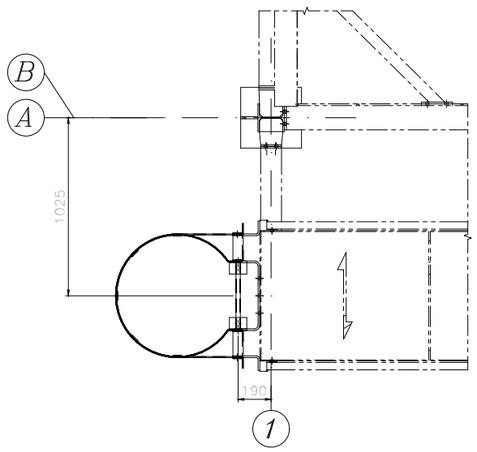

DET 5

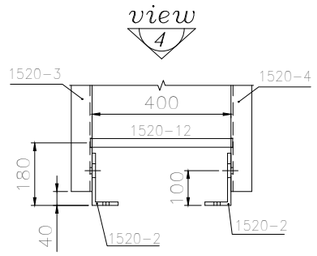

VIEW 4

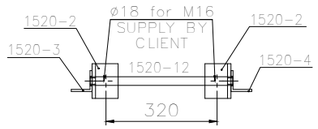

DET 3

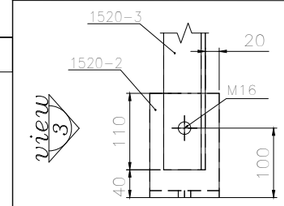

VIEW 3

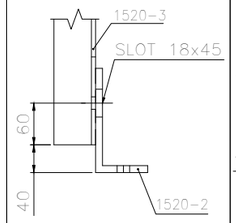

VIEW OF STRINGER

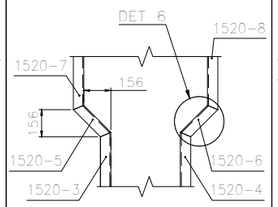

DET 6

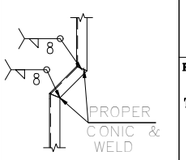

total ladder :4

PART LIST For 1 ladder

PART NO	DESCRIPTION	PROFILE	DIMENTION DIA (mm)	LENGTH (mm)	WIDTH (mm)	THK (mm)	MATERIAL	QTY.	UNIT WEIGHT (kg)	TOTAL WEIGHT (kg)	REV.
1520-1	CONCTION TO WALKWAY	PLATE	-	633	120	10	ST-37(Painted.)	1	6.1	6.1	
1520-2	EARTH SUPPORT	PLATE	-	215	100	10	ST-37(Painted.)	2	1.7	3.4	
1520-3	STRINGER	PLATE	-	4120	-	-	ST-37(Painted.)	1	22.3	22.3	
1520-4	STRINGER	PLATE	-	4120	-	-	ST-37(Painted.)	1	22.3	22.3	
1520-5	STRINGER	PLATE	-	245	-	-	ST-37(Painted.)	1	1.3	1.3	
1520-6	STRINGER	PLATE	-	245	-	-	ST-37(Painted.)	1	1.3	1.3	
1520-7	STRINGER	PLATE	-	969	-	-	ST-37(Painted.)	1	5.3	5.3	
1520-8	STRINGER	PLATE	-	969	-	-	ST-37(Painted.)	1	5.3	5.3	
1520-9	TOP HOOP	PLATE	-	1849	50	6	ST-37(Painted.)	2	4.4	8.8	
1520-10	VERTICAL BAR	PLATE	-	3045	50	6	ST-37(Painted.)	5	7.2	36	
1520-11	BOT HOOP	PLATE	-	1939	50	6	ST-37(Painted.)	3	4.6	13.8	
1520-12	RUNG	ROD25	25	410	-	-	ST-37(Painted.)	16	1.5	24	
									Total weight(kg)	**149.9**	

LIST of bolts & nuts 2 washer For 1 ladder

	DESCRIPTION	PROFILE	DIMENTION DIA (mm)	LENGTH (mm)	WIDTH (mm)	THK (mm)	MATERIAL	QTY.	UNIT WEIGHT (kg)	TOTAL WEIGHT (kg)	REV.
1590-1	for HANDRAIL CONNECTION	-	M12	40	-	-	DIN933-8.8 (Dacromet.)	4	-	-	
1590-2		-	M12	-	-	-	DIN934-8.8 (Dacromet.)	4	-	-	
1590-3		-	A13	-	-	-	DIN125A&T(Dacromet.)	8	-	-	
1590-4	for WALKWAY FRAME CONNECTION	-	M16	45	-	-	DIN933-8.8 (Dacromet.)	3	-	-	
1590-5		-	M16	-	-	-	DIN934-8.8 (Dacromet.)	3	-	-	
1590-6		-	A17	-	-	-	DIN125A&T(Dacromet.)	6	-	-	
1590-7	for CONNECTION to EARTH SUPPORT	-	M16	45	-	-	DIN933-8.8 (Dacromet.)	2	-	-	
1590-8		-	M16	-	-	-	DIN934-8.8 (Dacromet.)	2	-	-	
1590-9		-	A17	-	-	-	DIN125A&T(Dacromet.)	4	-	-	

NOTES:

1- ALL DIMENSIONS ARE IN MILLIMETER .
2-ALL PARTS SHALL PAINTED ACCORDING TO EI027-DMF-VD-QC-PRO-024
3- BOLTS & NUTS & WASHERS SHALL BE DACROMENT IN ACCORDANCE WITH ASTM - A153 OR EN ISO 1461
4- WELD: CONTINUOUS WELD.
MIN. HEIGHT OF FILLET WELD =0.7 x MIN. THK.
< MAX. THK. , IF MAX.THK.< 7mm
≤ MAX. THK.-1.5 , IF MAX.THK.> 7mm

TOLERANCES

THE FOLLOWING VALUES ARE APPLICABLE TO THE DIMENSIONS THAT ARE NOT PROVIDED WITH TOLERANCES ON DRAWING

NOMINAL DIMENSIONS PER MILLIMETER STEPS	0 200	201 800	801 2000	2001 5000	5001 & +
TOLERANCES ±	2	3	5	6	7

TOLERANCE ON CENTER DISTANCES ± 1.5
THE TOLERANCES SHOWN HERE ARE NOT CUMULATIVE

General Arrangement Drawing	1158-A01-1000-00	EI027-DMF-VD-ME-DWG-003
Steel Structure Drawing	1158-A01-1100-00	EI027-DMF-VD-ST-DWG-013
Header Walkway Drawing	1158-A01-1210-00	EI027-DMF-VD-ST-DWG-014

REV	DATE	DESCRIPTION	DRAWN BY	CHECKED BY	APPROVED BY	FINAL APPROVED BY
R1	11/13/2024	ISSUED FOR APPROVAL	J.M.	J.B.L	J.B.L	A.GHZ
R0	10/06/2024	ISSUED FOR APPROVAL	J.M.	J.B.L	J.B.L	A.GHZ

CLIENT: ENER TEKNOLOJI

CONTRACTOR: Damafin thermal technology
Factory : Km 14 special Karaj road

PROJECT :
AIR COOLER FOR
Toase-ehe Park Sanati Gohar Ofogh Petrochemical Co.
Ladder Drawing
1158-A01-1520-00

DWG. NO. EI027-DMF-VD-ST-DWG-015

SCALE : NTS | SIZE : A3 | REV. : R1

THIS DOCUMENT OF A CONFIDENTIAL NATURE IS THE PROPERTY OF DAMAFIN AND SHALL NOT BE REPRODUCED IN ANY MANNER, NOR USED FOR ANY PURPOSE WHAT SO EVER, EXCEPT BY WRITTEN PERMISSION OF DAMAFIN.