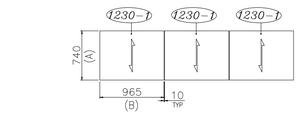

Grating Arrangement

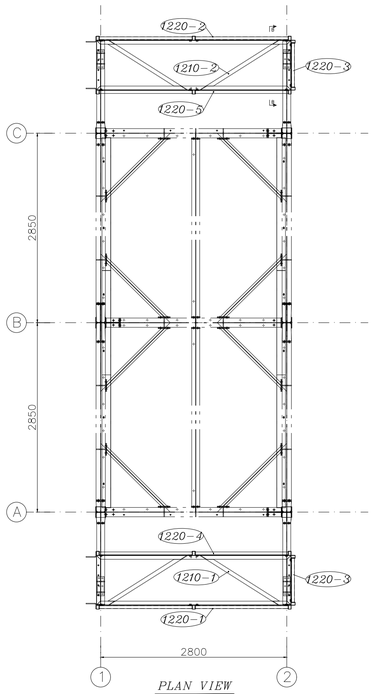

PLAN VIEW

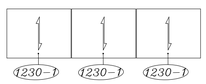

Grating Arrangement

1210-1 UPN140 , L60*6

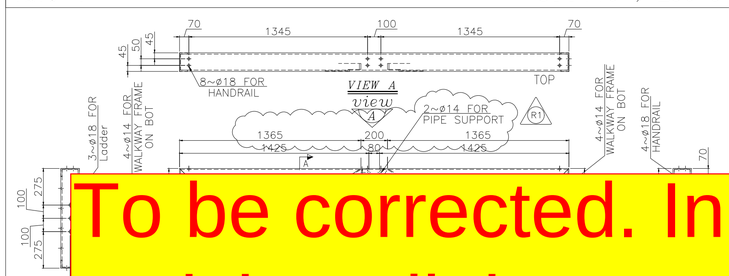

1220-1

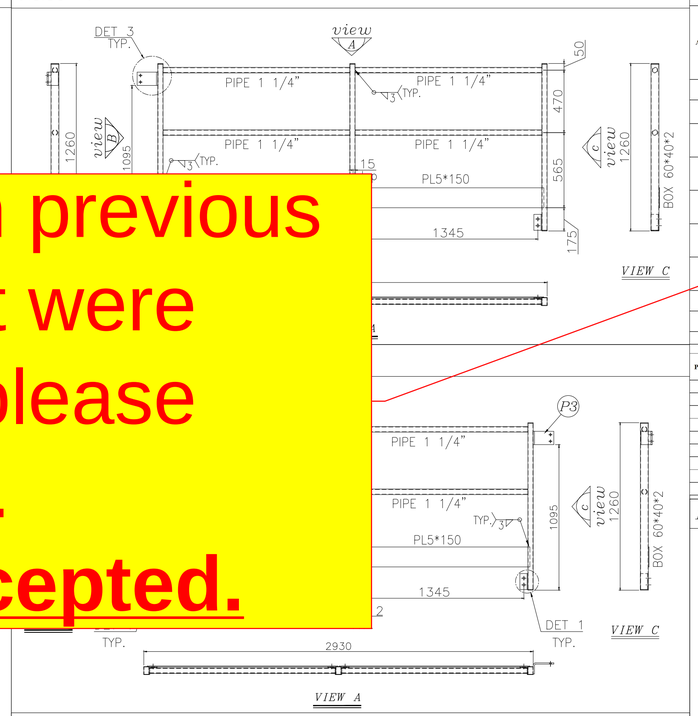

1210-

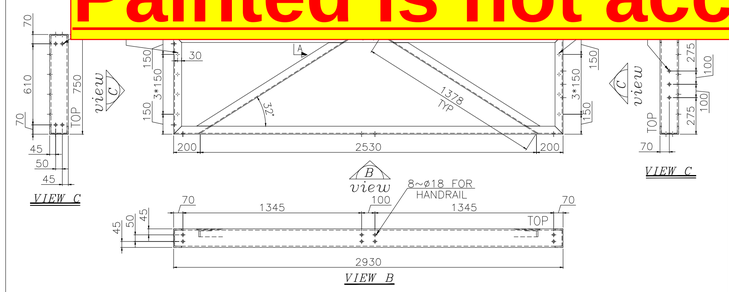

1220-5

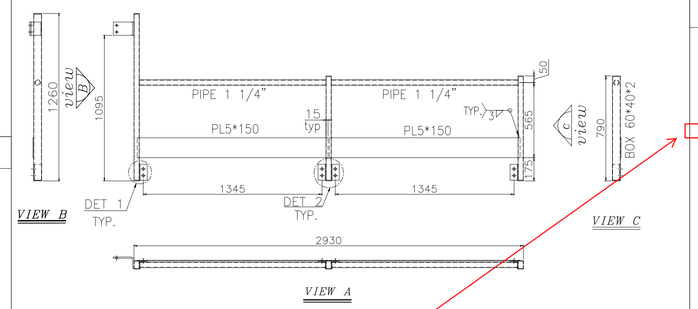

1220-4

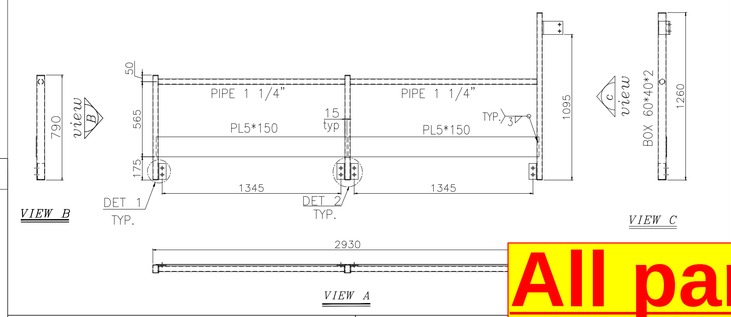

DET 1 DET 2 DET 3

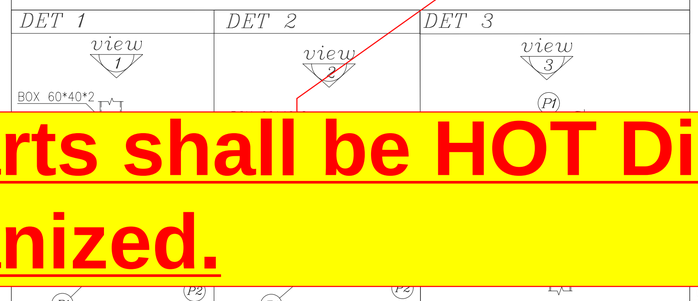

1220-3

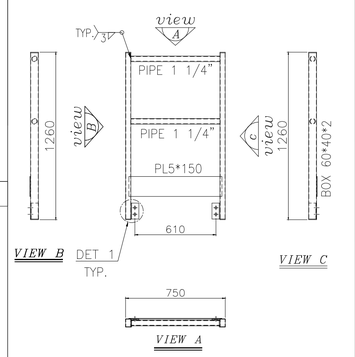

SEC B

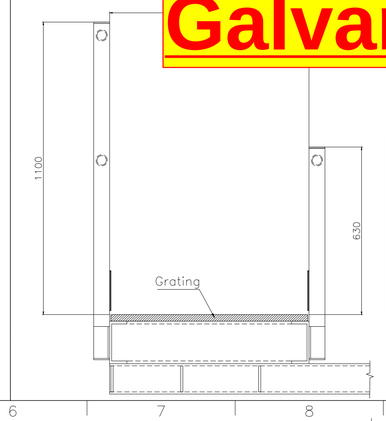

VIEW 1 VIEW 2 VIEW 3

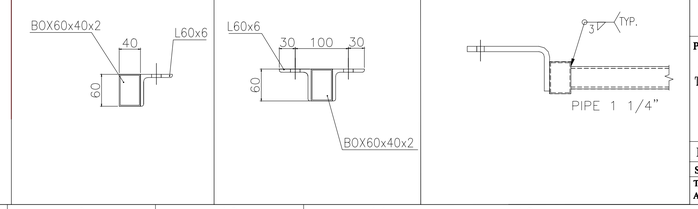

GRATING DESCRIPTION

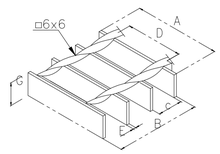

A	SEE PART LIST	—
B	SEE PART LIST	—
G	25	mm
E	5	mm
C	30	mm
D	50	mm

GRATING CLAMP

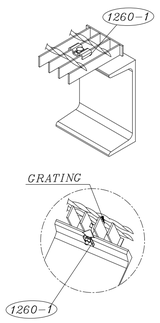

P1 THK.=5 P2 L60*6 SEC A

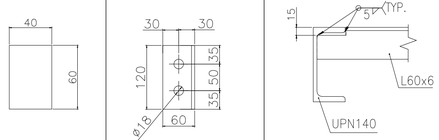

TOTAL UNITS =2

PART LIST FOR 1 UNIT

Dtt Assembly No	DESCRIPTION	PROFILE	DIMENTION DIA (mm)	LENGTH (mm)	WIDTH (mm)	THK (mm)	MATERIAL	QTY.	UNIT WEIGHT (kg)	TOTAL WEIGHT (kg)	REV.
1210-1	WALKWAY FRAME ASS.	UPN140 L60*6	-	2930	750	-	ST-37(Painted.)	1	132.9	132.9	R1
1210-2	WALKWAY FRAME ASS.	UPN140 L60*6	-	2930	750	-	ST-37(Painted.)	1	132.9	132.9	R1
1220-1	HIGH HANDRAIL ASS.	BOX60×40×2 PIPE 1 1/4" PLATE 5*150	-	2930	1260	-	ST-37(Painted.)	1	53.9	53.9	R1
1220-2	HIGH HANDRAIL ASS.	BOX60×40×2 PIPE 1 1/4" PLATE 5*150	-	2930	1260	-	ST-37(Painted.)	1	53.9	53.9	R1
1220-3	SHORT HANDRAIL ASS.	BOX60×40×2 PIPE 1 1/4" PLATE 5*150	-	750	1260	-	ST-37(Painted.)	2	19.4	38.8	R1
1220-4	SHORT HANDRAIL ASS.	BOX60×40×2 PIPE 1 1/4" PLATE 5*150	-	2930	790	-	ST-37(Painted.)	1	41.3	41.3	R1
1220-5	HIGH HANDRAIL ASS.	BOX60×40×2 PIPE 1 1/4" PLATE 5*150	-	2930	790	-	ST-37(Painted.)	1	41.3	41.3	R1
1230-1	GRATING	-	-	965(B)	740 (A)	25	ST-37(Painted.)	6	31	186	R1
1260-1	GRATING CLAMP	-	-	-	-	-	ST-37(Painted.)	24		-	R1
TOTAL WEIGTH (kg)										681	

LIST OF BOLTS & NUTS & 2WASHERS for 1 Units

PART NO.	DESCRIPTION	PROFILE	DIMENTION DIA (mm)	LENGTH (mm)	WIDTH (mm)	THK (mm)	MATERIAL	QTY.	UNIT WEIGHT (kg)	TOTAL WEIGHT (kg)	REV.
1290-1	for WALKWAY FRAME TO STRUCTRE.	-	M12	40	-	-	DIN933-8.8(Dacromet.)	16	-	-	
1290-2		-	M12		-	-	DIN934-8(Dacromet.)	16	-	-	
1290-3		-	A13		-	-	DIN125A-ST(Dacromet.)	32	-	-	
1290-4	for HANDRAIL ASS	-	M16	40	-	-	DIN933-8.8(Dacromet.)	40	-	-	
1290-5		-	M16		-	-	DIN934-8(Dacromet.)	40	-	-	
1290-6		-	A17		-	-	DIN125A-ST(Dacromet.)	80	-	-	
1290-7	for GRATING CLAMP	-	M6	50	-	-	DIN933-8.8(Dacromet.)	24	-	-	
1290-8		-	M6	-	-	-	DIN934-8(Dacromet.)	24	-	-	
1290-9		-	A7	-	-	-	DIN125A-ST(Dacromet.)	48	-	-	

P3 THK.=10

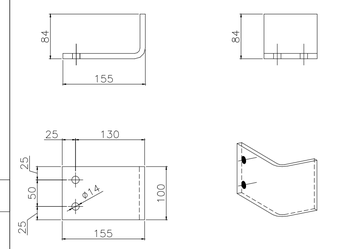

NOTES:

1- ALL DIMENSIONS ARE IN MILLIMETER .

2-ALL PARTS SHALL PAINTED ACCORDING TO E1027-DMF-VD-QC-PRO-024

3- BOLTS & NUTS & WASHERS SHALL BE DACROMET IN ACCORDANCE WITH ASTM - A153 OR EN ISO 1461

4- WELD: CONTINUOUS WELD.
MIN. HEIGHT OF FILLET WELD =0.7 x MIN. THK.
< MAX. THK. , IF MAX.THK.< 7mm
< MAX. THK.-1.5 , IF MAX.THK.> 7mm

TOLERANCES

THE FOLLOWING VALUES ARE APPLICABLE TO THE DIMENSIONS THAT ARE NOT PROVIDED WITH TOLERANCES ON DRAWING

NOMINAL DIMENSIONS PER MILLIMETER STEPS	0 200	201 800	801 2000	2001 5000	5001 & +
TOLERANCES ±	2	3	5	6	7

TOLERANCE ON CENTER DISTANCES ± 1.5
THE TOLERANCES SHOWN HERE ARE NOT CUMULATIVE

Arrangement Drawing	1158-A01-1000-00	EI027-DMF-VD-ME-DWG-003
Structure Drawing	1158-A01-1100-00	EI027-DMF-VD-ST-DWG-013
adder Drawing	1158-A01-1520-00	EI027-DMF-VD-ST-DWG-015

To be corrected. In previous revision all the part were **galvanized**. and please mention HDG also.
Painted is not accepted.

All parts shall be HOT Dip Galvanized.

REV	DATE	DESCRIPTION	DRAWN BY	CHECKED BY	APPROVED BY	FINAL APPROVED BY
R1	11/13/2024	ISSUED FOR APPROVAL	J.M.	J.B.L	J.B.L	A.GHZ
R0	10/05/2024	ISSUED FOR APPROVAL	J.M.	J.B.L	J.B.L	A.GHZ

CLIENT: ENER TEKNOLOJI

CONTRACTOR: dtt Damafin thermal technology Factory : Km 14 special Karaj road

PROJECT :
AIR COOLER FOR
Toase-ehe Park Sanati Gohar Ofogh Petrochemical Co.
Header Walkway Drawing
1158-A01-1210-00

DWG. NO. EI027-DMF-VD-ST-DWG-014

SCALE : NTS SIZE : A1 REV. : R1

THIS DOCUMENT OF A CONFIDENTIAL NATURE IS THE PROPERTY OF DAMAFIN AND SHALL NOT BE REPRODUCED IN ANY MANNER, NOR USED FOR ANY PURPOSE WHAT SO EVER, EXCEPT BY WRITTEN PERMISSION OF DAMAFIN.