5110-01 THK.=4

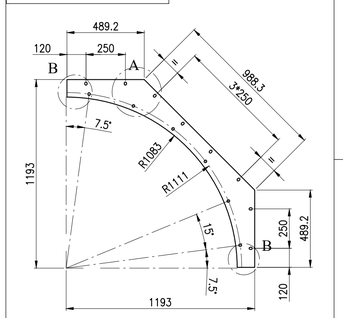

SCALE 2:1

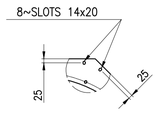

DET. A
SCALE 2:1

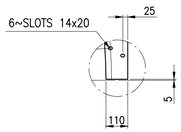

DET. B
SCALE 2.5:1

5110-02L&R FLAT PATTERN THK.=3

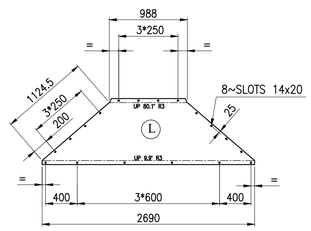

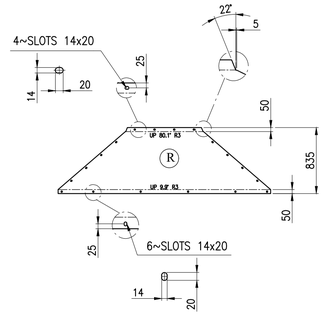

5110-02L&R AFTER BENDING

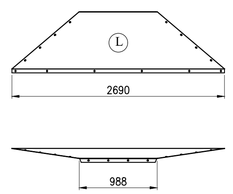

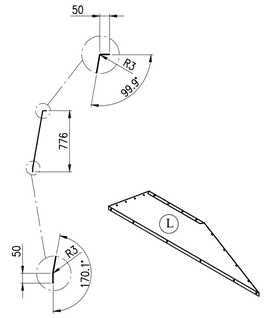

5110-03L&R FLAT PATTERN THK.=3

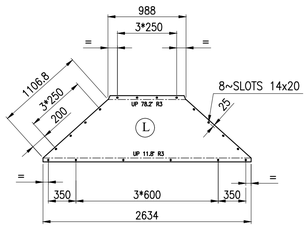

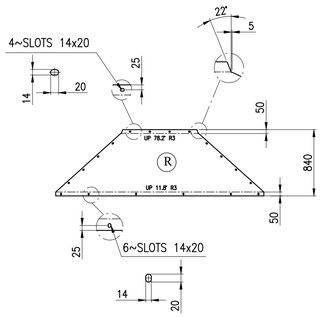

5110-03L&R AFTER BENDING

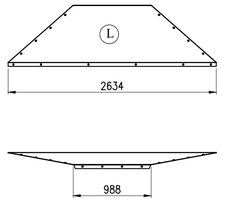

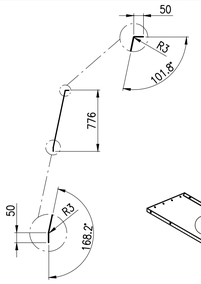

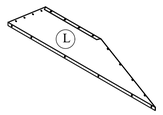

5110-06 L50x5

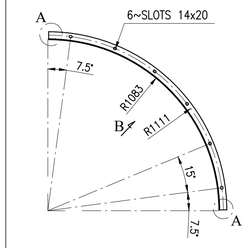

SCALE 2:1

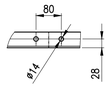

VIEW B
SCALE 4:1

DET A
SCALE 4:1

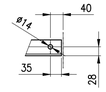

VIEW C
SCALE 4:1

5110-04 & 5110-05 FLAT PATTERN THK.=3

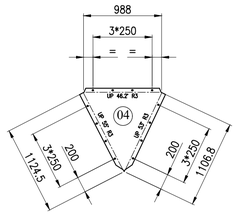

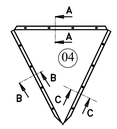

AFTER BENDING

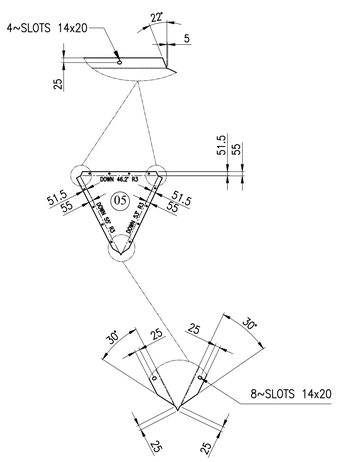

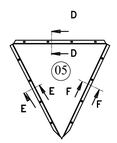

AFTER BENDING

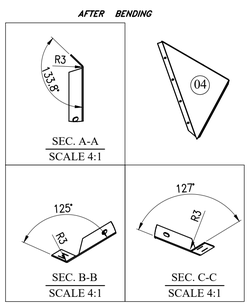

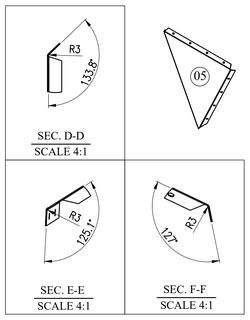

PLENUM ASSEMBLY

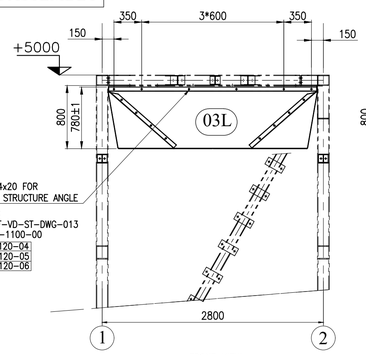

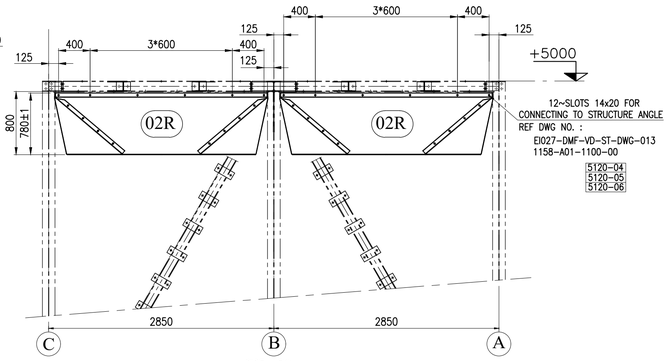

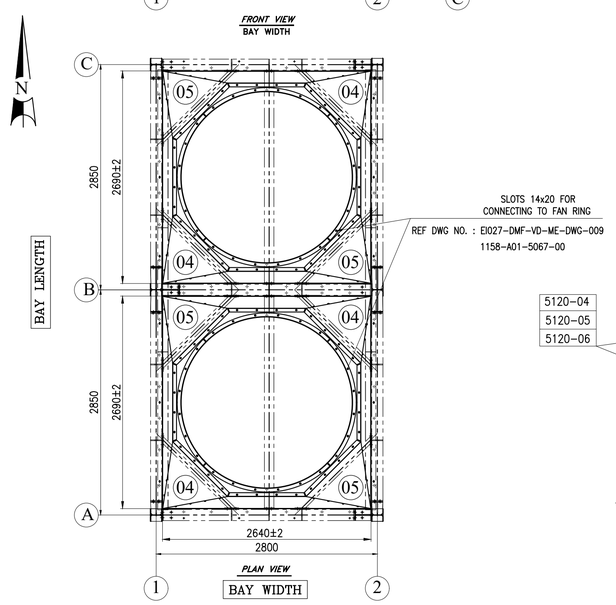

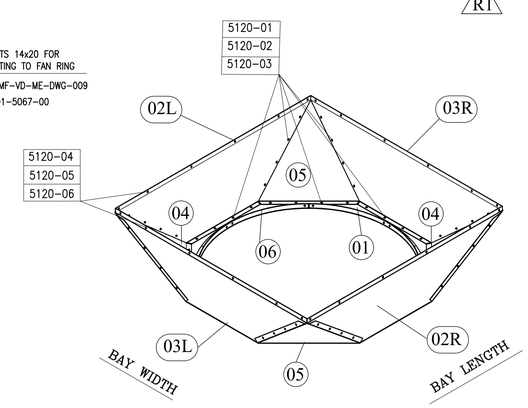

ISOMETRIC VIEW

R1

PART LIST

PART NO.	DESCRIPTION	DIA. (mm)	LENGTH(mm)	WIDTH (mm)	THK. (mm)	MATERIAL	QTY.	Unit Weight(kg)	Total Weight(kg)	REV.
5110-00	***PLENUM TRANSITION INCLUDING:***	-	-	-	-	-	4	262	1048	
5110-01	OCTAGONAL PLATE ASSEMBLY	-	-	-	4	St-37(Hot Dip Galv.)	4	8	32	R1
5110-02	TRAPEZOID PLATE (LEFT&RIGHT)	-	-	-	3	St-37(Hot Dip Galv.)	2	36	72	R1
5110-03	TRAPEZOID PLATE (LEFT&RIGHT)	-	-	-	3	St-37(Hot Dip Galv.)	2	36	72	R1
5110-04	TRIANGULAR PLATE	-	-	-	3	St-37(Hot Dip Galv.)	2	15.5	31	R1
5110-05	TRIANGULAR PLATE	-	-	-	3	St-37(Hot Dip Galv.)	2	15.5	31	R1
5110-06	ANGLE FAN RNG SUPPORT(L 50*5)	-	-	-	-	St-37(Hot Dip Galv.)	4	6	24	R1
5120-00	***BOLT/NUT/WASHER :***	-	-	-	-	-	-			
5120-01	BOLT	M12	40	-	-	DIN-933-CL 8.8(Dacromet)	64			
5120-02	NUT	M12	-	-	-	DIN-934-CL 8(Dacromet)	64			
5120-03	WASHER	A13	-	-	-	DIN-125A-ST(Dacromet)	128			
5120-04	BOLT FOR PLENUM TO STRUCTURE	M12	40	-	-	DIN-933-CL 8.8(Dacromet)	24			
5120-05	NUT	M12	-	-	-	DIN-934-CL 8(Dacromet)	24			
5120-06	WASHER	A13	-	-	-	DIN-125A-ST(Dacromet)	48			

NOTES :

1-ALL DIMENSION ARE IN MILLIMETERS.

2-BOLTS, NUTS,WASHERS,THREADS,PARTS INCLUDES THREADS SHALL BE AS PER PROJECT SPECIFICATION DOC. NO.: EI027-DMF-VD-QC-PRO-024

3- ALL PARTS HOT DIP GALVANIZING SHALL BE DONE AS PER ASTM-123/ISO 1461. R1

* FOR MORE DETAILS FOR EACH COMPONENT OF AIR COOLER REFER TO BELOW DRAWING & DOCUMENTS.

REFERENCED DWG&DOC.

TITLE	VENDOR DOCUMENT NO.	CLIENT DOCUMENT NO.
General Arrangement Drawing	1158-A01-1000-00	EI027-DMF-VD-ME-DWG-003
Fan Drive Assembly Drawing	1158-A01-6000-00	EI027-DMF-VD-ME-DWG-008
Fan Ring Drawing	1158-A01-5067-00	EI027-DMF-VD-ME-DWG-009
Steel Structure Drawing	1158-A01-1100-00	EI027-DMF-VD-ST-DWG-013
Surface Blasting & Painting & Galvanizing Specification and InspectionProcedure	1158-000-QS01-00	EI027-DMF-VD-QC-PRO-024

REV	DATE	DESCRIPTION	DRAWN BY	CHECKED BY	APPROVED BY	FINAL APPROVED BY
R1	08/31/2024	ISSUED FOR APPROVAL	F.SZ	F.A.	J.B.L	A.GHZ
R0	08/14/2024	ISSUED FOR APPROVAL	F.SZ	F.A.	J.B.L	A.GHZ

CLIENT: EN3R TEKNOLOJI

CONTRACTOR:

PROJECT :

AIR COOLER FOR

Toase-che Park Sanati Gohar Ofogh Petrochemical Co.

Plenum Drawing

1158-A01-5110-00

Damafin thermal technology

Factory : Km 14 special Karaj road

DWG. NO.	EI027-DMF-VD-ME-DWG-011	
SCALE : N.T.S.	SIZE : A1	REV. : R1

THIS DOCUMENT OF A CONFIDENTIAL NATURE IS THE PROPERTY OF DAMAFIN AND SHALL NOT BE REPRODUCED IN ANY MANNER, NOR USED FOR ANY PURPOSE WHAT SO EVER, EXCEPT BY WRITTEN PERMISSION OF DAMAFIN.