NOTES :

1-All DIMENSIONS ARE IN MILLIMETERS.

2-PROTECTION(HOT DIP GALVANIZING SPECIFICATION AND INSPECTION PROCEDURE SHALL BE DONE AS PER ASTM-123/DOC. NO. EI027-DMF-VD-QC-PRO-024)

3-COATING SHALL BE AS PER PROJECT SPECIFICATION.

4-MIN HEIGHT OF FILLET WELD=0.7xMIN THK.

TOLERANCES			
THE FOLLOWING VALUES ARE APPLICABLE TO THE DIMENSIONS THAT ARE NOT PROVIDED WITH TOLERANCES ON DRAWING			
NOMINAL DIMENSIONS PER MILLIMETER STEPS	0 800	801 5000	5001 & +
TOLERANCES ±	1	2	3
TOLERANCE ON CENTER DISTANCES ± 0.5 THE TOLERANCES SHOWN HERE ARE NOT CUMULATIVE			

PART LIST

PART NO	DESCRIPTION	DIA. (mm)	LENGTH (mm)	WIDTH (mm)	THK. (mm)	MATERIAL	QTY.	Unit Weight	Total Weight	REV.
6307-00	SUPPORT MECHANISM INCLUDING:	-	-	-	-	-	4	151	606	
6307-00/1	SUPPORT MECHANISM FRAME ASSEMBLY:	-	-	-	-	-	1	142	142	
6307-01	UPN 200	-	2290	-	-	st-37(Galv.)	1	58	58	
6307-02	UPN 200	-	2290	-	-	st-37(Galv.)	1	58	58	
6307-03	UPN 80	-	604	-	-	st-37(Galv.)	1	5	5	
6307-04	UPN 80	-	604	-	-	st-37(Galv.)	1	5	5	
6307-05	L50*5	-	920			st-37(Galv.)	2	3	7	
6307-06	L- SHAPE 85*80*10	-	400	-	10	st-37(Galv.)	2	5	9	
6307-00/2	BEARING BLOCK SUPPORT ASSEMBLY:						1	18	18	
6307-07	UPN 100	-	540	-	-	st-37(Galv.)	2	6	11	
6307-08	UPN 100	-	300	-	-	st-37(Galv.)	2	3	6	
	BOLT & NUT & WASHER INCLUDING :									
6307-09	BOLT FOR CONNECTING B.B. SUPPORT TO SUPPORT MECHA	M16	50	-	-	DIN-933-CL.8.8(Dacromet)	4			
6307-10	NUT	M16	-	-	-	DIN-934-CL.8(Dacromet)	4			
6307-11	WASHER	A17	-	-	-	DIN-125A-ST(Dacromet)	4			
6307-12	TAPER WASHER	-	-	-	-	DIN-434-18-ST-8%(Dacromet)	4			
6307-13	BOLT FOR CONNECTING SUPPORT MECHANISM TO FAN RING	M12	40	-	-	DIN-933-CL.8.8(Dacromet)	8			
6307-14	NUT	M12	-	-	-	DIN-934-CL.8(Dacromet)	8			
6307-15	WASHER	A13	-	-	-	DIN-125A-ST(Dacromet)	16			

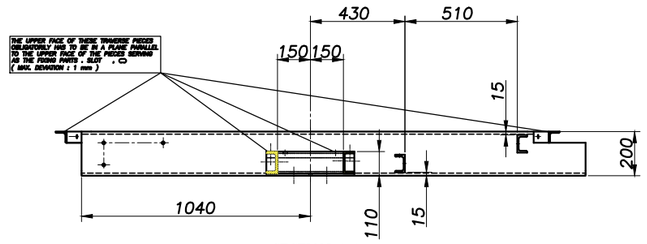

SECTION A-A

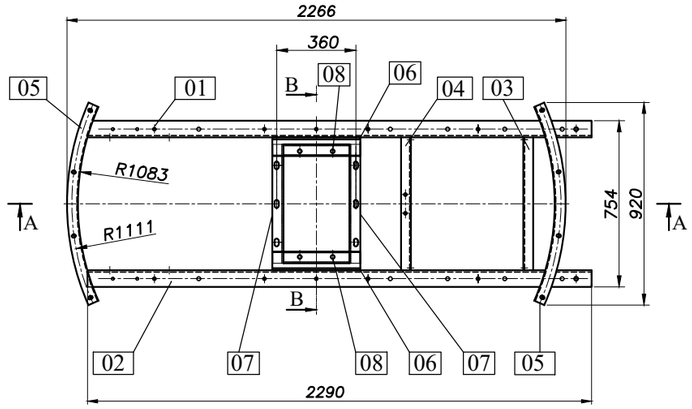

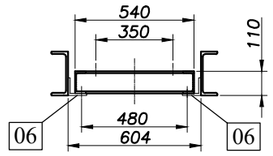

SEC. B-B

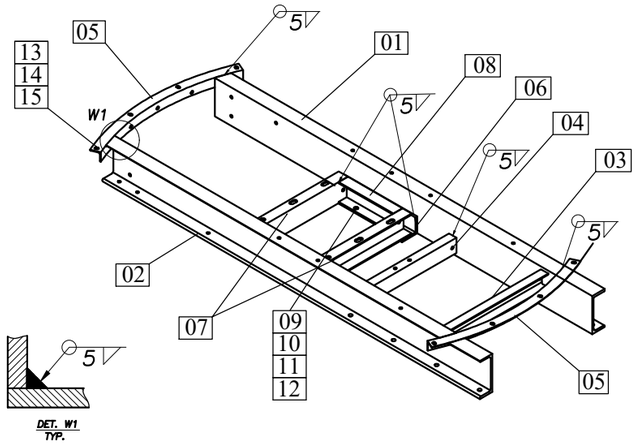

UPN 200 6307-01

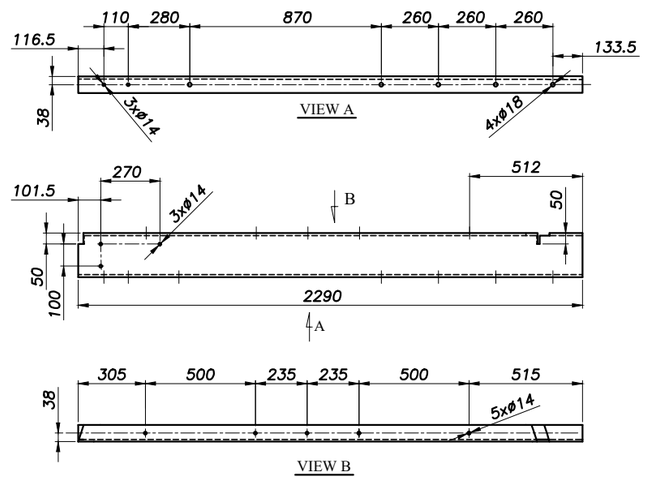

UPN 200 6307-02

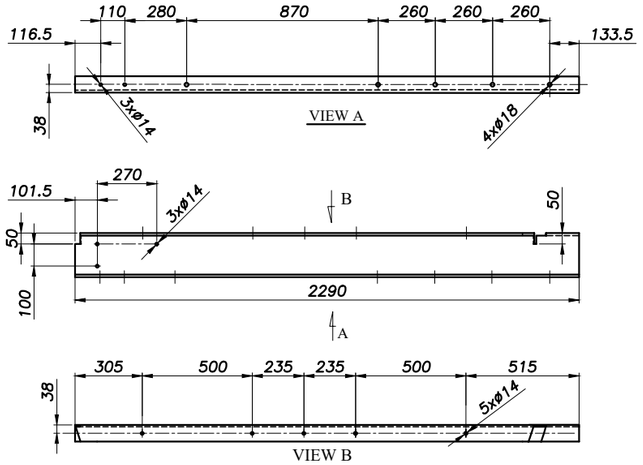

* FOR MORE DETAILS FOR EACH COMPONENT OF AIR COOLER REFER TO BELOW DRAWING & DOCUMENTS.

REFERENCED DWG&DOC.

TITLE	VENDOR DOCUMENT NO.	CLIENT DOCUMENT NO.
General Arrangement Drawing	1158-A01-1000-00	EI027-DMF-VD-ME-DWG-003
Fan Drive Assembly Drawing	1158-A01-6000-00	EI027-DMF-VD-ME-DWG-008
Plenum Drawing	1158-A01-5110-00	EI027-DMF-VD-ME-DWG-011
Fan Ring Drawing	1158-A01-5067-00	EI027-DMF-VD-ME-DWG-009
Surface Preparation and Painting Procedure for Air Cooler	1158-A01-QS01-00	EI027-DMF-VD-QC-PRO-024

6307-03 UPN 80

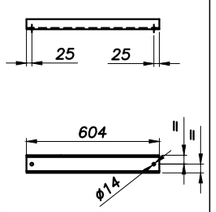

6307-04 UPN 80

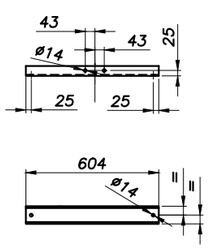

6307-05 L50*5

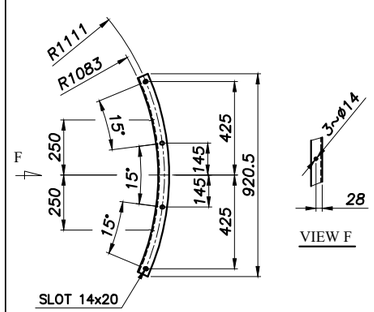

6307-06
L-SHAPE 85*80*10

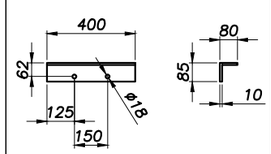

6307-00/2 UPN 100

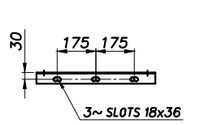

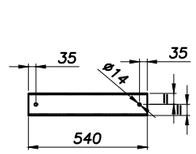

DET. 07

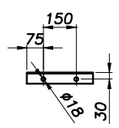

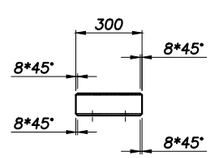

DET. 08

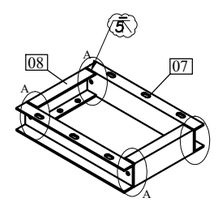

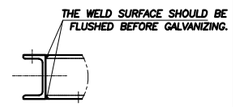

DET. A

REV	DATE	DESCRIPTION	DRAWN BY	CHECKED BY	APPROVED BY	FINAL APPROVED BY
R0	08/10/2024	ISSUED FOR APPROVAL	F.SZ	F.A.	J.B.L	A.GHZ

CLIENT: ENER TEKNOLOJI

CONTRACTOR:

PROJECT : AIR COOLER FOR Toase-ehe Park Sanati Gohar Ofogh Petrochemical Co.

Support Mechanism Drawing

1158-A01-6037-00

Damafin thermal technology

Factory : Km 14 special Karaj road

DWG. NO.	EI027-DMF-VD-ME-DWG-010	
SCALE : N.T.S.	SIZE : A3	REV. : R0

THIS DOCUMENT OF A CONFIDENTIAL NATURE IS THE PROPERTY OF DAMAFIN AND SHALL NOT BE REPRODUCED IN ANY MANNER, NOR USED FOR ANY PURPOSE WHAT SO EVER, EXCEPT BY WRITTEN PERMISSION OF DAMAFIN.