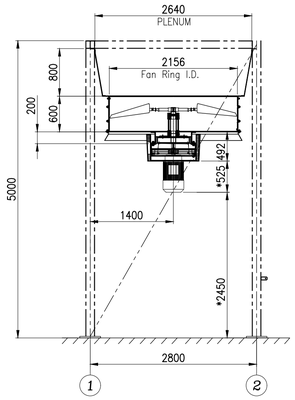

FRONT VIEW

CL. A,C

* THIS DIMENSION WILL BE FINALIZED AFTER APPROVED OF MOTOR DATA SHEET

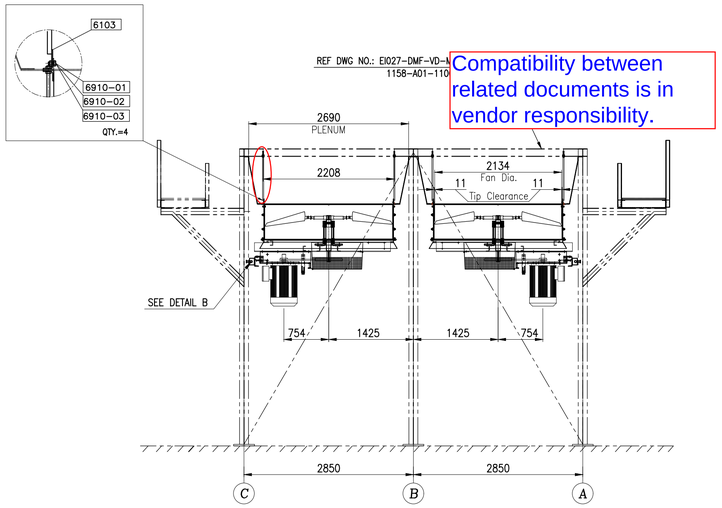

SIDE VIEW

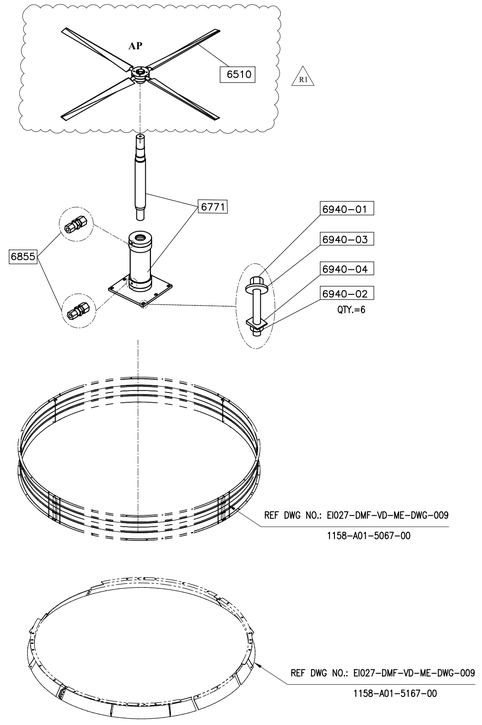

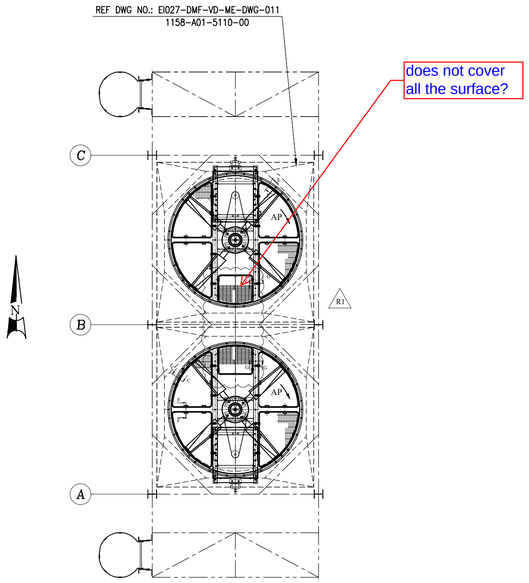

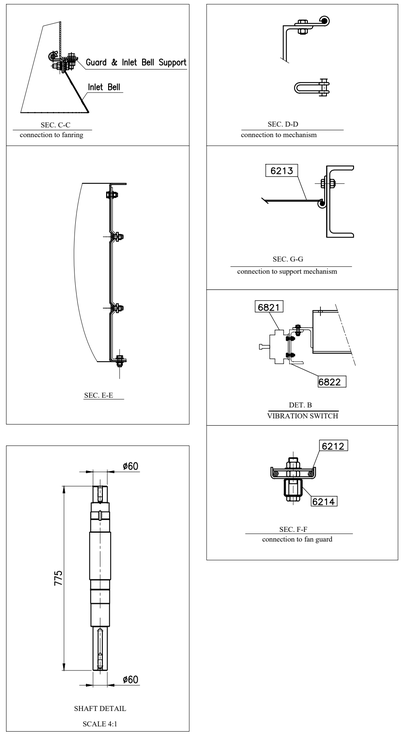

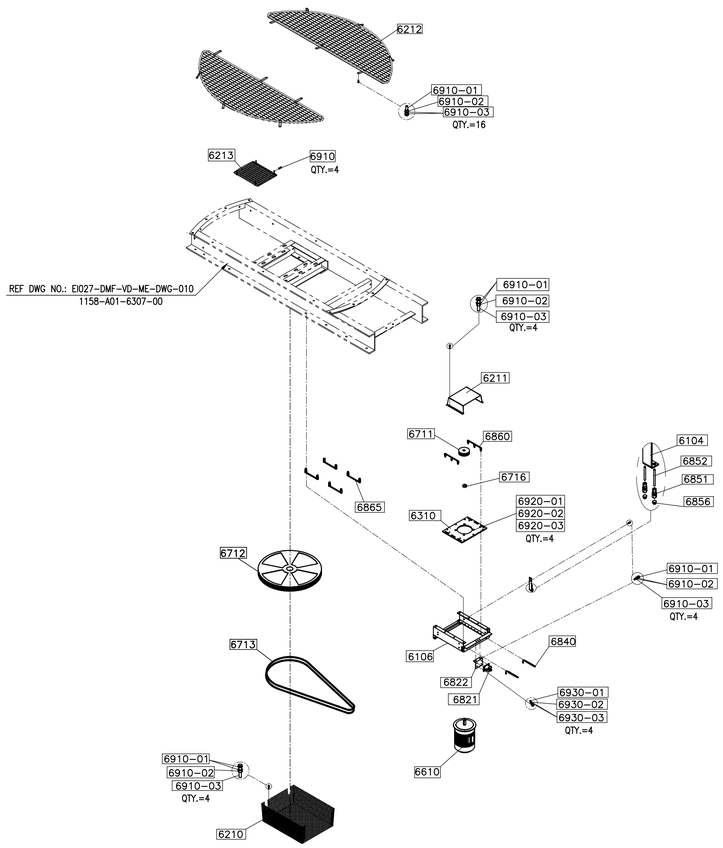

PART NO.	DESCRIPTION	DIMENTION	MATERIAL	QTY.	UNIT WEIGHT (Kg)	TOTAL WEIGHT (Kg)	REV.
6000-00	FAN DRIVE ASSEMBLY FOR TWO UNITS	-	-	4		906	R1
	FAN DRIVE ASSEMBLY FOR ONE UNITS			2		453	R1
EACH FAN DRIVE WITH AP FAN FOR ONE SET INCLUDES :				1AP	226.5	226.5	R1
6103-00	TIE BEAM	REF. SHEET 2	ST-37(Galv.)	2	2.5	5	
6104-00	LUBRICATION PIPING SUPPORT	REF. SHEET 2	ST-37(Galv.)	1	1	1	
6106-00	MOTOR SUPPORTING STRUCTURE	REF. SHEET 2	ST-37(Galv.)	1	61	61	
6210-00	DRIVEN PULLEY GUARD	REF. SHEET 2	ST-37(Galv.)	1	10	10	
6211-00	DRIVER PULLEY GUARD	REF. SHEET 2	ST-37(Galv.)	1	8	8	
6212-00	FAN GUARD, 7(FT)				20	-	
6212-00/1	TRAIN/ANGULAR MESH			1	5	5	
6212-00/2	TRAIN/ANGULAR MESH			1	5	5	
6212-00/3	TRAIN/ANGULAR MESH	REF. SHEET 2	ST-37(Galv.)	1	5	5	
6212-00/4	TRAIN/ANGULAR MESH			1	5	5	
6213-00	DRIVE SUPPORTING STRUCTURE GUARD, 7(FT)	REF. SHEET 2	ST-37(Galv.)	1	3	3	
6214-00	FAN GUARD SUPPORT	REF. SHEET 2	ST-37(Galv.)	2	3	5	
6310-00	MOTOR PLATE	REF. SHEET 2	ST-37(Galv.)	1	-	-	
6510-00	FAN UNIT DIA.(7 Ft) BLADE NO.=4	REF. DSH.	Manufacturer standard	1	-	-	
6610-00	MOTOR (7.5 KW -ELECTRIC-Exe,IIB-T3-IP55)	REF. DSH.	Manufacturer standard	1	-	-	
6711-00	DRIVER PULLEY PT106SPA2/PBT106SPA2	REF. DSH.	GG20/ ASTM A48-94a	1	-	-	
6712-00	DRIVEN PULLEY PT400SPA2/PBT400SPA2	REF. DSH.	GG20/ ASTM A48-94a	1	-	-	
6713-00	BELT CAPXPA2332 CD=754.3	REF. DSH.	Manufacturer standard	2	-	-	
6716-00	SPACER BETWEEN MOTOR&PULLEY	REF. SHEET 2	ST-37(Galv.)	1	0.3	0.3	
6771-00	SHAFT & BEARING BLOCK	REF. DSH.	Manufacturer standard	1	103	103	
6821-00	VIBRATION SWITCH(HOLD)	REF. DSH.	Manufacturer standard	1	-	-	R1
6822-00	VIBRATION SWITCH SUPPORT (HOLD)	REF. SHEET 2	ST-37(Galv.)	1	2	2	R1
6840-00	TENSIONING BOLT	M16	C.S CL. 8.8(GALV.)/A36	2	1	2	
6851-00	UNION FEMALE CONECTOR(1/8" NPT-8mm(TUBE))	REF. SHEET 2	S.S/304L	2	0.1	0.2	
6852-00	TUBE (OD=8 mm,ID=6)	4000	S.S/304L	1	-	-	
6855-00	UNION MALE CONECTOR(1/4" NPT-8mm(TUBE))	REF. DSH.	S.S/304L	2	-	-	
6856-00	GREASE NIPPLE (1/8" NPT)	REF. DSH.	S.S/304L	2	-	-	
6860-00	CLAMP	REF. SHEET 2	C.S(GALV.)/A36	2	1	2	
6865-00	CLAMP	REF. SHEET 2	C.S(GALV.)/A36	4	1	4	
BOLT & NUT &WASHER FOR ASSEMBLY PARTS AP FAN:				1SET	4SET		
6103-03	NUT FOR TIE BEAM	M16	DIN 934 -CL.8 (Dacromet.)	4	16		
6103-04	WASHER	A17	DIN 125 A17 St (Dacromet.)	4	16		
6106-05	BOLT FOR FAN GUARD SUPPORT	M16x40	DIN 933 CL 8.8 (Dacromet.)	6	24		
6106-06	NUT	M16	DIN 934 -CL.8 (Dacromet.)	12	48		
6106-07	WASHER	A17	DIN 125 A17 St (Dacromet.)	6	24		
6840-02	NUT FOR TENSIONING BOLT	M16	DIN 934 -CL.8 (Dacromet.)	4	16		
6840-03	WASHER	A17	DIN434-18-ST(8%) (Dacromet.	2	8		
6840-04	WASHER	A17	DIN 125 A17 St (Dacromet.)	2	8		
6860-02	BOLT FOR CLAMP	M16x55	DIN 933 CL 8.8 (Dacromet.)	6	24		
6860-03	NUT	M16	DIN 934 -CL.8 (Dacromet.)	6	24		
6860-04	WASHER	A17	DIN 125 A17 St (Dacromet.)	12	48		
6865-02	BOLT FOR CLAMP	M16x55	DIN 933 CL 8.8 (Dacromet.)	8	32		
6865-03	NUT	M16	DIN 934 -CL.8 (Dacromet.)	16	64		
6865-04	WASHER	A17	DIN 125 A17 St (Dacromet.)	16	64		
BOLT & NUT &WASHER FOR ASSEMBLY PART (FAN DRIVE TO PROJECT LACATION)							
BOLT & NUT &WASHER FOR ASSEMBLY PART AP OR AV FAN:				1SET	4SET		
6910-01	BOLT	M12x40	DIN 933 CL 8.8 (Dacromet.)	36	144	-	
6910-02	NUT	M12	DIN 934 -CL.8 (Dacromet.)	36	144	-	
6910-03	WASHER	A13	DIN 125 A17 St (Dacromet.)	72	288	-	
6920-01	BOLT FOR MOTOR TO MOTOR PLATE	M16*70	DIN 933 CL 8.8 (Dacromet.)	4	16	-	
6920-02	NUT	M16	DIN 934 -CL.8 (Dacromet.)	4	16	-	
6920-03	WASHER	A17	DIN 125 A17 St (Dacromet.)	4	16	-	
6930-01	BOLT FOR VIBRATION SWITCH SUPPORT	M8*30	DIN 933 CL 8.8 (Dacromet.)	4	16	-	
6930-02	NUT	M8	DIN 934 -CL.8 (Dacromet.)	4	16	-	
6930-03	WASHER	A9	DIN 125 A17 St (Dacromet.)	8	32	-	
6940-01	BOLT FOR BEARING BLOCK TO SUPPORT MECHANISM	M16x65	DIN 933 CL 8.8 (Dacromet.)	6	24	-	
6940-02	NUT	M16	DIN 934 -CL.8 (Dacromet.)	6	24	-	
6940-03	WASHER	A17	DIN 125 A17 St (Dacromet.)	6	24	-	
6940-04	WASHER	A17	DIN434-18-ST(8%) (Dacromet.	6	24	-	

For Bolt and nuts 12 mm and above shall be Hot Dip Galvanized According to ASTM A153 (45-55 µ).

* FOR MORE DETAILS FOR EACH COMPONENT OF AIR COOLER REFER TO BELOW DRAWING & DOCUMENTS.

REFERENCED DWG&DOC.

TITLE	VENDOR DOCUMENT NO.	CLIENT DOCUMENT NO.
General Arrangement Drawing	1158-A01-1000-00	EI027-DMF-VD-ME-DWG-003
Plenum Drawing	1158-A01-5110-00	EI027-DMF-VD-ME-DWG-011
Fan Ring Drawing	1158-A01-5067-00	EI027-DMF-VD-ME-DWG-009
Support Mechanism Drawing	1158-A01-6307-00	EI027-DMF-VD-ME-DWG-010
Steel Structure Drawing	1158-A01-1100-00	EI027-DMF-VD-ST-DWG-013
Surface Preparation and Painting Procedure	1158-A01-QS01-00	EI027-DMF-VD-QC-PRO-024

REFERENCE DSH

TITLE	VENDOR DOCUMENT NO.	CLIENT DOCUMENT NO.
Axial Fan Data Sheet	1158-A01-6510-00	EI027-DMF-VD-ME-DSH-016
Electrical Motor Data Sheet	1158-A01-6610-00	EI027-DMF-VD-EL-DSH-017
Belt & Pulley Data Sheet	1158-A01-6710-00	EI027-DMF-VD-ME-DSH-018
Vibration Switch Data Sheet	1158-A01-6800-00	EI027-DMF-VD-IN-DSH-019

FITTINGS OF FAN SHAFT BEARINGS LUBRICATION

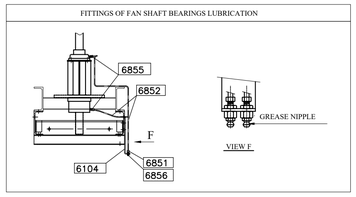

NOTE :

1-ALL DIMENSION ARE IN MILLIMETERS.

2-HOT DIP GALVANIZING SHALL BE DONE AS PER ASTM-123/ISO 1461.

3-ALL PARTS SHALL BE HOT DIP GALVANIZED.

4-BOLTS, NUTS,WASHERS,THREADS,PARTS INCLUDES THREADS SHALL BE PROJECT SPECIFICATION. R1

5-DETAILS OF THE PARTS NO. 6822-00 & 6310-00 & 6716-00 WILL BE ADDED AFTER THE MANUFACTURER HAS FINALIZED.

Please refer to the doc. No also.

REV	DATE	DESCRIPTION	DRAWN BY	CHECKED BY	APPROVED BY	FINAL APPROVED BY
R1	08/20/2024	ISSUED FOR APPROVAL	F.SZ	F.A	J.B.L	A.GHZ
R0	08/07/2024	ISSUED FOR APPROVAL	F.SZ	F.A	J.B.L	A.GHZ

CLIENT: EN3R TEKNOLOJI

CONTRACTOR:

PROJECT :

AIR COOLER FOR

Toase-che Park Sanati Gohar Ofogh Petrochemical Co.

Fan Drive Assembly Drawing

1158-A01-6000-00

(SHEET 1OF 2)

DWG. NO. EI027-DMF-VD-ME-DWG-008

SCALE : N.T.S. SIZE : A1 REV. : R1

dtt Damafin thermal technology

Factory : Km 14 special Karaj road

THIS DOCUMENT OF A CONFIDENTIAL NATURE IS THE PROPERTY OF DAMAFIN AND SHALL NOT BE REPRODUCED IN ANY MANNER, NOR USED FOR ANY PURPOSE WHAT SO EVER, EXCEPT BY WRITTEN PERMISSION OF DAMAFIN.

DETAIL 6103-00

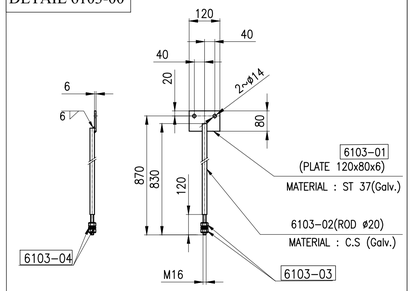

DETAIL 6104-00

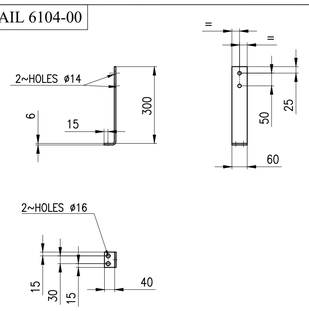

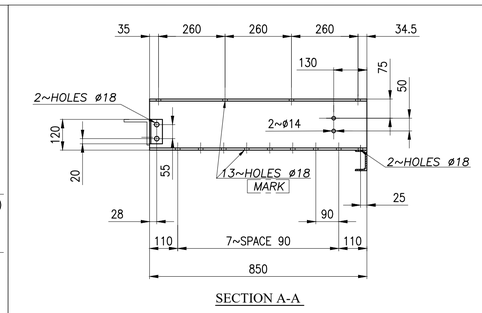

SECTION A-A

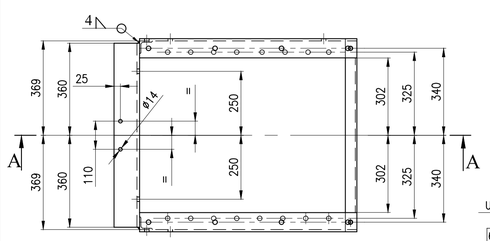

DETAIL 6106-00

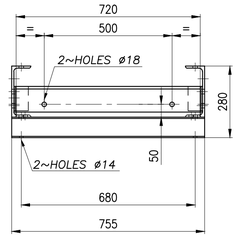

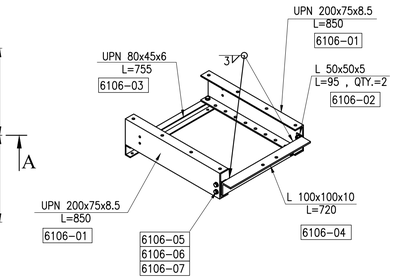

DETAIL 6212-00

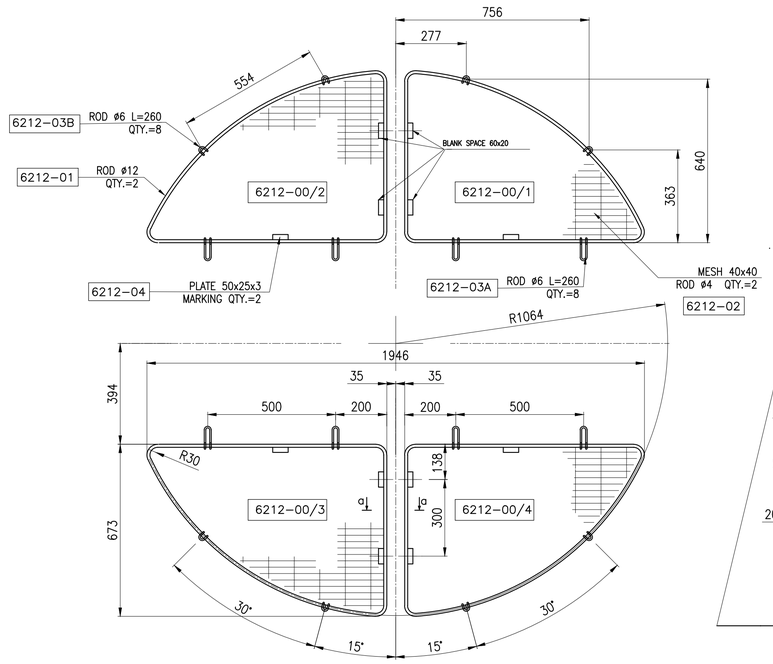

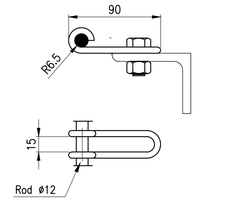

connection to mechanism
6212-03A

SEC. A-A

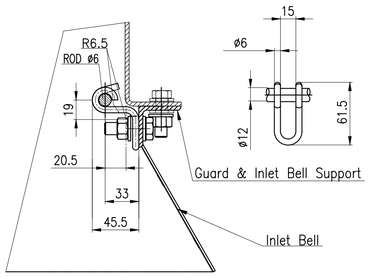

connection to conical fan ring
6212-03/B

DETAIL 6210-00

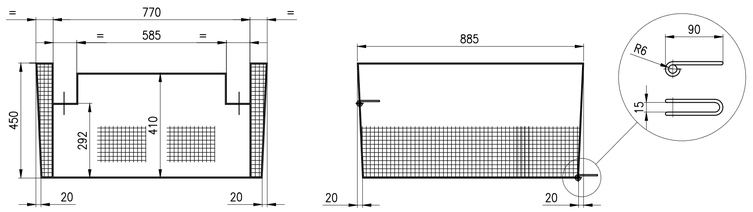

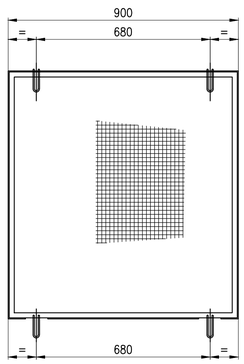

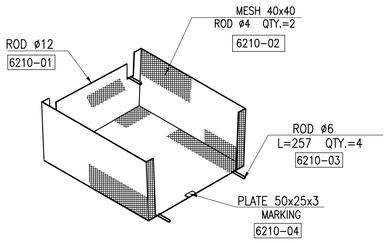

WELDING	
12 mm ROD TO 12 mm ROD	◣ 8
12 mm ROD TO GRILL	◣ 3

DETAIL 6211-00

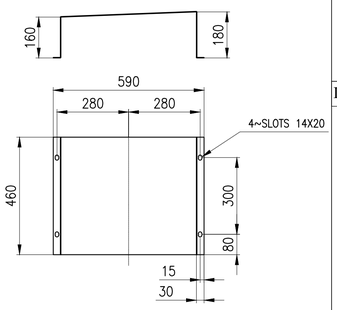

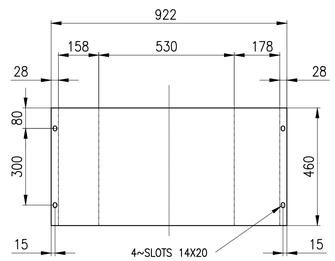

FLAT PATTERN THK.=2

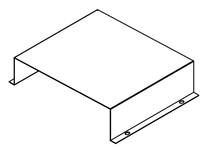

DETAIL 6214-00

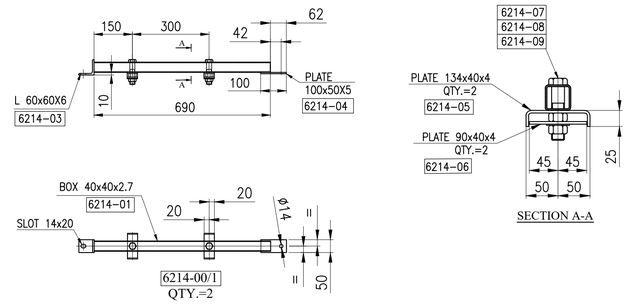

SECTION A-A

DETAIL 6310-00

* SEE NOTE 5

DETAIL 6213-00

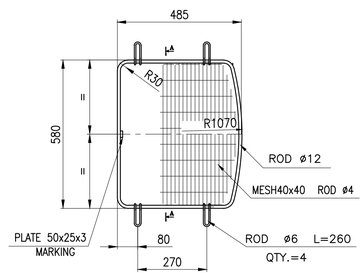

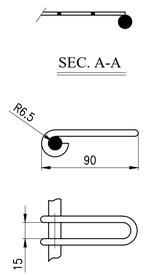

SEC. A-A

DETAIL 6840-00

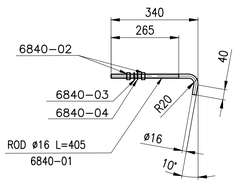

DETAIL 6860-00

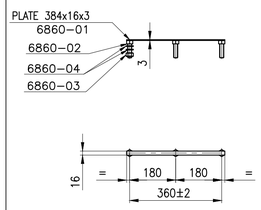

DETAIL 6865-00

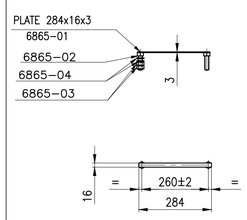

DETAIL 6822-00

* SEE NOTE 5

DETAIL 6716-00

* SEE NOTE 5

REV	DATE	DESCRIPTION	DRAWN BY	CHECKED BY	APPROVED BY	FINAL APPROVED BY
R1	08/20/2024	ISSUED FOR APPROVAL	F.SZ	F.A	J.B.L	A.GHZ
R0	08/07/2024	ISSUED FOR APPROVAL	F.SZ	F.A	J.B.L	A.GHZ

CLIENT:

CONTRACTOR:

PROJECT :

AIR COOLER FOR

Toase-che Park Sanati Gohar Ofogh Petrochemical Co.

Fan Drive Assembly Drawing

1158-A01-6000-00

(SHEET 2 OF 2)

DWG. NO. EI027-DMF-VD-ME-DWG-008

SCALE : N.T.S. SIZE : A1 REV. : R1

Damafin thermal technology

Factory : Km 14 special Karaj road

THIS DOCUMENT OF A CONFIDENTIAL NATURE IS THE PROPERTY OF DAMAFIN AND SHALL NOT BE REPRODUCED IN ANY MANNER, NOR USED FOR ANY PURPOSE WHAT SO EVER, EXCEPT BY WRITTEN PERMISSION OF DAMAFIN.