For pipe supports Please refer to the folder which is attached.

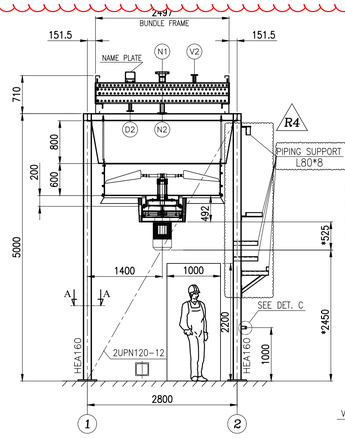

FRONT VIEW
CL. A,C

* THIS DIMENSION WILL BE FINALIZED AFTER APPROVED OF MOTOR DATA SHEET

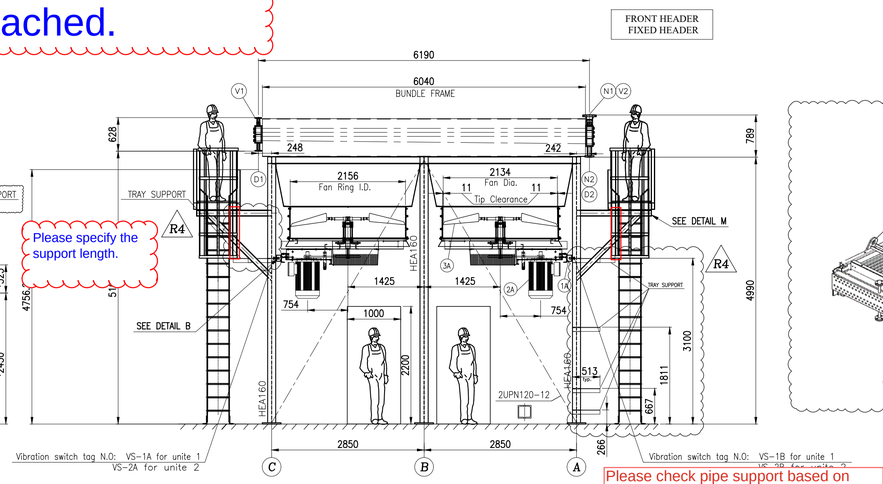

Please specify the support length.

Please check pipe support based on updated drawings

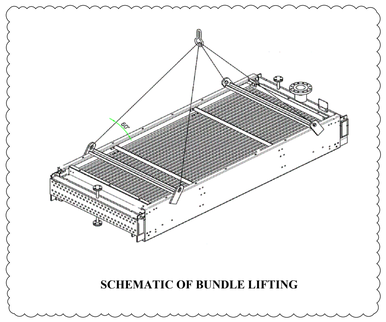

SCHEMATIC OF BUNDLE LIFTING

SIDE VIEW

Please reverse north direction

Tag No for vibration switch:
RU0001A-01A for unite A
RU0001A-01B for unite A
RU0001B-01A for unite B
RU0001B-01B for unite B

Tag No for Fan
RU0001A-F-02 for unite A
RU0001A-F-03 for unite A
RU0001B-F-02 for unite B
RU0001B-F-03 for unite B

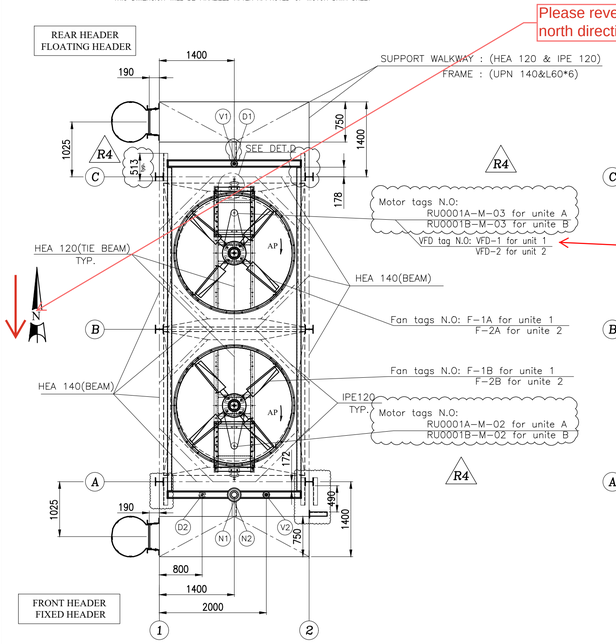

TOP VIEW

Tag No for VFD:
RU0001A-VFD-01 for unite A
RU0001B-VFD-01 for unite B

please specify the distance of the supports from column center.

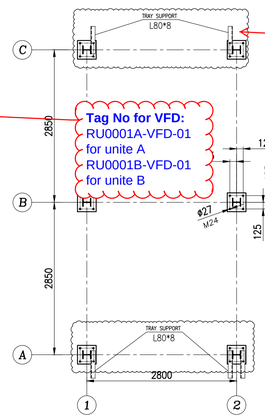

BASE PLATE VIEW
+TRAY SUPPORT

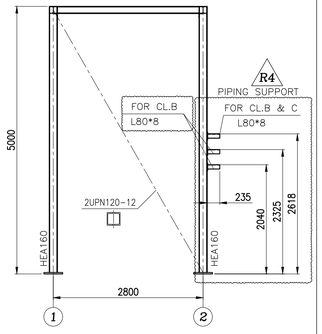

FRONT VIEW
CL. B

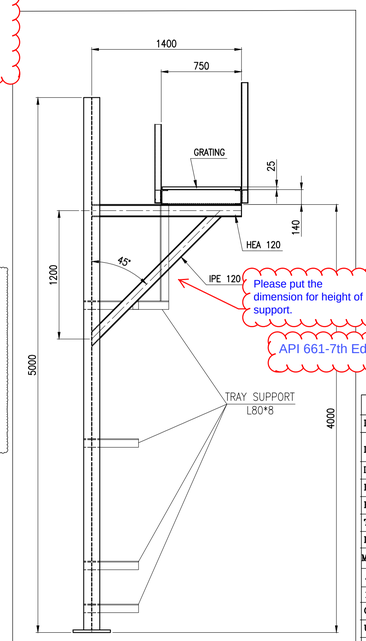

Please put the dimension for height of support.

API 661-7th Edition R2018

DET. M

TABLE: Joint Reactions				
Joint	OutputCase	Fx	Fy	Fz
Text	Text	Kgf	Kgf	Kgf
A-1	DEAD_S	16.65	-45	861.98
A-1	DEAD	49.34	-158.83	1640.14
A-1	DEAD_OP	4.08	-14.37	92.37
A-1	DEAD_N	-1631.93	429.16	-2881.5
A-1	LIVE	3.34	25.54	1383.73
A-1	WX	31.57	329.34	-352.72
A-1	WY	-387.76	93.94	-669.09
A-1	SNOW	9.74	-24.99	547.6
A-1	EQX	106.43	1146.34	-1764.17
A-1	EQY	-1561.76	337	-3289.21
A-1	EQXO	210.24	2295.43	-3529.78
A-1	EQYO	-3123.79	673.24	-6571.39
A-2	DEAD_S	-20.6	1.599E-13	380.54
A-2	DEAD	-33.06	-0.00000289	811.07
A-2	DEAD_OP	-0.21	-3.963E-07	55.27
A-2	DEAD_N	-10.59	-1.13	-378.95
A-2	LIVE	-76.47	6.353E-13	402.18
A-2	WX	1.165E-12	49.87	8.288E-13
A-2	WY	-54.91	-1.269E-13	-353.83
A-2	SNOW	-19.58	-8.653E-07	221.21
A-2	EQX	0.004107	45.8	0.09216
A-2	EQY	-48.82	-0.38	-1465.12
A-2	EQXO	0.00889	92.7	0.18
A-2	EQYO	-98.54	0.78	-2927.34
A-3	DEAD_S	16.65	45	861.98
A-3	DEAD	49.34	158.83	1640.17
A-3	DEAD_OP	4.08	14.37	92.37
A-3	EQY	-1071.77	-428.48	-2570.23
A-3	EQXO	-210.36	2295.75	3529.6
A-3	EQYO	-2144	-856.2	-5134.3
B-1	DEAD_S	34.11	-1.44	482.68
B-1	DEAD	174.23	-2.24	983.92
B-1	DEAD_OP	16.3	0.03128	81.45
B-1	DEAD_N	-670.87	1.33	2555.04
B-1	LIVE	-43.74	-6.51	64.14
B-1	WX	-255.25	0.99	-374.63
B-1	WY	-1.33	-70.96	504.74
B-1	SNOW	24.65	-1.56	193.87
B-1	EQX	-985.73	4.1	-1834.5
B-1	EQY	-51.12	-28.6	2619.38
B-1	EQXO	-1968.03	8.18	-3658.39
B-1	EQYO	-102.38	-57.85	5233.15
B-2	DEAD_S	-3.76E-15	-9.82	342.79
B-2	DEAD	-1.168E-10	-61.15	847.79
B-2	DEAD_OP	-1.602E-11	-8.01	77.09
B-2	DEAD_N	-0.0003857	-403.24	720.08
B-2	LIVE	8.844E-15	82.81	-147.91
B-2	WX	-56.07	3.583E-12	-6.399E-12
B-2	WY	-8.004E-14	-439.42	682.53
B-2	SNOW	-3.498E-11	3.21	131.34
B-2	EQX	0.02819	0.04229	-0.07544
B-2	EQY	0.006383	-1570.51	2804.88
B-2	EQXO	-0.2	0.08416	-0.15
B-2	EQYO	0.0007535	-3138.25	5603.81
B-3	DEAD_S	-34.11	-1.44	482.68
B-3	DEAD	-174.23	-2.24	983.9
B-3	DEAD_OP	-16.3	0.03128	81.45
B-3	DEAD_N	-670.07	1.26	1104.47
B-3	LIVE	43.74	-6.51	64.14
B-3	WX	-255.25	-0.99	374.63
B-3	WY	1.33	-70.96	504.74
B-3	SNOW	-24.65	-1.56	193.87
B-3	EQX	-985.8	-4.09	1834.58
B-3	EQY	-40.75	-28.68	1900.29
B-3	EQXO	-1968.16	-8.15	3658.54
B-3	EQYO	-81.36	-57.83	3796.07

This note is not accepted. please mention about refer to related document(NDT MAP)

NOTES:

1) Loading Data
   WIND :ASCE7-16,VELOCITY :125Km/h, EXPOSURE : C
   Earthquake: Standard No. 2800,A=0.3,B=2.75,I=1.4,R=3.5,SOIL TYPE=IV
2) Fans
   -100% AP(Adjustable pitch-manual)
3) Miscellaneous
   - The Inlet Header Boxes Are Fixed In The Direction Of Fin Tubes, Refer To Table For The Lateral Displacement In Y Direction
   - Flange Face Detail : ASME ANSI B16.5
4) All Dimensions Are In Millimeter Unless Otherwise Specified.
5) All Dimensions Tolerances Are According to API 661.(Figure 10)
6) Bolts which are used for fixing headers to side frame , on sliding side should be removed after erection.
7) PROTECTION(SEE Galvanizing Specification and Inspection Procedure: EI027-DMF-VD-QC-PRO-024
8) RADIOGRAPHIC TEST (FULL/SPOT) SHALL BE IN COMPLIANCE WITH THE REQUIREMENTS OFNASME SEC. VIII DIV.1 UW-11 & UW-12.
9) 50% motors per unit to be VFD.

LOAD DEFINITION*

DEAD	DEAD LOAD(PLENUMS+FAN RINGS+FAN GUARDS+FAN+MOTOR+SPEED REDUCERS+GRATING+ +TUBE BUNDLE EMPTY)+HEADER WALK WAY
DEAD OP	WEIGHT OF LIQUID WITHIN EACH TUBE BUNDLE& STEAM COIL(WATER)
DEADS	SELF WEIGHT OF STRUCTURE
DEADN	NOZZEL LOAD
LIVE	WALKWAY LOAD 250 Kg/m2
EQX	SEISMIC LOAD DIR.X
EQY	SEISMIC LOAD DIR.Y
WX	WIND LOAD DIR.X
WY	WIND LOAD DIR.Y
SNOW	66 Kg/m2

* Further Definition Check the Steel Structure Calculation.Doc No.: EI027-DMF-VD-ST-CAL-004 1158-A01-0030-00

THE MAXIMUM ALLOWABLE MOMENTS AND FORCES PER EACH NOZZLE (IF LOADS ARE DIVIDED EQUALLY FOR NOZZLES ACCORDING TO 3xAPI 661(7.1.10.1)

SIZE	Fx(N)	Fy(N)	Fz(N)	Mx(N.m)	My(N.m)	Mz(N.m)
4"	10020	8010	10020	2430	3660	2430
2"	3060	3990	3060	450	720	450

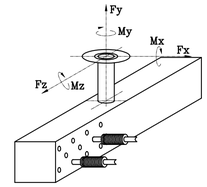

CONNECTIONS

NO.	REP.	QTY. PER BAY/2UNIT	DIA	DESIGNATION
N1	INLET NOZZLE/FLANGE	1/2	4"	FLANGE ANSI B16.5,#300,WN,RF,SCH.160,SA-333 Gr.6 /SA-350 LF2 CL.1N,THK.=13.49
N2	OUTLET NOZZLE/FLANGE	1/2	2"	FLANGE ANSI B16.5,#300,LWN,RF,SA-350 LF2 CL.1N,THK.=16.6
V1&V2	VENT	2/4	1"	FLANGE ANSI B16.5,#300,LWN,SA-350 LF2 CL1 N,THK.=14.3
D1&D2	DRAIN	2/4	1"	FLANGE ANSI B16.5,#300,LWN,SA-350 LF2 CL1 N,THK.=14.3
1A	VIBRATION SWITCH	2/4	–	SEE FAN DRIVE ASSEMBLY DRAWING
2A	MOTOR(7.5Kw)	2/4	–	SEE FAN DRIVE ASSEMBLY DRAWING
3A	FAN	2/4	7ft	SEE FAN DRIVE ASSEMBLY DRAWING

LATERAL DISPLACEMENT OF HEADERS (DIRECTION X) INSIDE BUNDLE FRAME IN RELATION WITH EXPANSION FORCES ON NOZZLES (mm) (ACCORDING TO API661 7-1-1-2)

MAXIMUM DISPLACEMENT	INLET/OUTLET : ±9

* FOR MORE DETAILS FOR EACH COMPONENT OF AIR COOLER REFER TO BELOW DRAWING & DOCUMENTS.

REFERENCED DWG&DOC.

TITLE	VENDOR DOCUMENT NO.	CLIENT DOCUMENT NO.
Tube Bundle Drawing	1158-A01-2000-00	EI027-DMF-VD-ME-DWG-005
Bundle Frame Drawing	1158-A01-2400-00	EI027-DMF-VD-ME-DWG-007
Fan Drive Assembly Drawing	1158-A01-6000-00	EI027-DMF-VD-ME-DWG-008
Fan Ring Drawing	1158-A01-5067-00 1158-A01-5167-00	EI027-DMF-VD-ME-DWG-009
Support Mechanism Drawing	1158-A01-6307-00	EI027-DMF-VD-ME-DWG-010
Plenum Drawing	1158-A01-5110-00	EI027-DMF-VD-ME-DWG-011
Steel Structure Drawing	1158-A01-1100-00	EI027-DMF-VD-ST-DWG-013
Header Walkway Drawing	1158-A01-1200-00	EI027-DMF-VD-ST-DWG-014
Ladder Drawing	1158-A01-1520-00	EI027-DMF-VD-ST-DWG-015
Surface Preparation and Painting Procedure for Air Cooler	1158-A01-QS01-00	EI027-DMF-VD-QC-PRO-024

GENERAL DATA

ITEM NO.	–
DESIGN CODE BUNDLE/STRUCTURE	ASME SEC.VIII DIV.1(2019), API661(2013-7th EDITION)/Standard No. 2800
INLET PRESSURE/PRESSURE DRO. (ALLOWABLE/CALC.)	19.8 Bar /(0.1/0.016) Bar
DESIGN PRESSURE	22+F.V. (barg)
HYDROSTATIC TEST PRESSURE	28.6 (bar)
TEMPERATURE IN/OUT(TUBE SIDE)	73.5°C/56.32°C
DESIGN TEMPERATURE	120 °C
MINIMUM DESIGN METAL TEMPERATURE	-45°C
AIR INLET/OUTLET TEMPERATURE (AIR SIDE)	48 / 52.28 °C
MINIMUM DESIGN AMBIENT TEMPERATURE	5 °C
CORROSION ALLOWANCE	3 mm
ULTRASONIC TEST	YES(Full)[See note 8]
RADIOGRAPHY	YES(Full)[See note 8]
STRESS RELIEVING	YES
BARE/FINNED SURFACE PER UNIT	68.101/1579.2 m2
NUMBER OF BUNDLE PER BAY	1
[illegible]	2
[illegible] UNIT	1
[illegible] RATING/TYPE)	1x4"/1x2"/SCH.160/#300
[illegible]	PROPANE
SERVICE	PROPANE
PASSES PER BUNDLE	4
FINNED-TUBES/BUNDLE	NO.140 TUBES,OD=25.4,SEAMLESS MIN.W,BWG16,THK.=1.65,L=6096 mm
Tube to tube sheet joint	STRENGTH WELD + EXPANDED
Fin (Type,material, OD,FPI)	EXTRUDE,AL 1060,57.15,11
STEAM COIL	NO
LOUVER/TYPE	NO/-
PLENUM / FAN RING	FORCED TYPE/CONICAL L/D=0.05
VIBRATION SWITCH	YES,(FOR EACHFAN) MANUAL & ELECTRIC RESET
FAN SPECIFICATION :RPM/DIAMETER	382/7 Ft
[illegible]	8.5"
[illegible]	4/ALUMINIUM
STATIC PRESSURE	26.879 mm
AIR TEMPERATURE IN/OUT	102.95 Pa
SPEED REDUCER TYPE	48°C/52.28°C
REDUCTION RATIO	V BELLT
MOTOR TYPE	3.76
VOLTAGE/Freq./PHASES	ELECTRIC-Exe,IIB-T3-IP55
RPM/KW	400/50/3
Motor VFD per unit	1500/7.5 Kw
	50%
S.P.L. 1m all side of fan:	<85 dB(A)1m all sides

Please add VFD power to this table

Ex db IIB T4

To be updated please.

Please add below information for Vibration switch in table
- Ex d IIC T5 Gb, IP 65

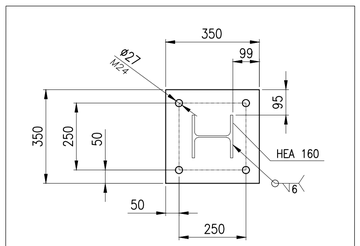

SEC. A-A
Thk.=25 mm
SC. 5:1

Anchor bolt ,Nut and Washer Material:
Bolt: F1554-Gr.36
Nut: ASTM A563 Gr.DH
Washer: ASTM F436

EARTHING LUG

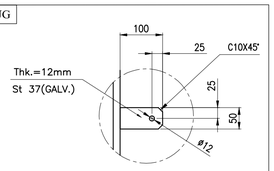

DET. C
* Only FOR COLUMNS : A1&C2

VIBRATION SWITCH

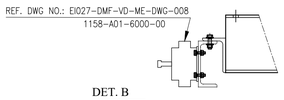

DET. B

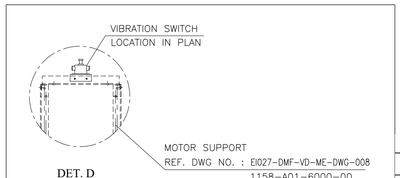

DET. D

Table 1. Weight of equipments For 1 Units (Total Units = 2)

	Total No in one Unit	Total Weight in one Unit (tonf)	Total No. for One Bay	Weight for One Bay (kgf)
Bundle Frame	1	0.865	1	865
Tube Bundle & Headers	1	2.635	1	2635
	sum			3500
Water in Tubes & Headers	1	0.48	1	480
	sum			480
Plenum	2	0.245	2	490
Fan Ring	2	0.13	2	260
Motor	2	0.07	2	140
Fan	2	0.0275	2	55
Speed Reducer	2	0.25	2	500
Machinery Mount	2	0.32	2	640
Fan Guard	2	0.0325	2	65
	sum			2150
Fabrication Weight For 1 Units				5650
Operation Weight For 1 Units				6130
~~Hydrotest Weight For 1 Units~~				~~6130~~
Total Weight of Main structure, Ladder for 1 Units				5600

Please add the followings:
-Bundle Frame+Tube bundle (DRY)
-Bundle Frame +Tube bundle (OP)
-Bundle Frame+Tube bundle (HYD)

Please-totally revise by considering the below comments:
-Operating weight is equal to hydro test. please check it.
-Total weight of main structure ,ladder is 5600 since fabricated weight is 5650

REV	DATE	DESCRIPTION	DRAWN BY	CHECKED BY	APPROVED BY	FINAL APPROVED BY
R4	09/22/2024	ISSUED FOR APPROVAL	F.SZ	J.M.	J.B.L	A.GHZ
R3	08/21/2024	ISSUED FOR APPROVAL	F.SZ	J.M.	J.B.L	A.GHZ
R2	08/10/2024	ISSUED FOR APPROVAL	F.SZ	J.M.	J.B.L	A.GHZ
R1	07/22/2024	ISSUED FOR APPROVAL	F.SZ	J.M.	J.B.L	A.GHZ
R0	06/30/2024	ISSUED FOR APPROVAL	F.SZ	J.M.	J.B.L	A.GHZ

CLIENT: ENER TEKNOLOJI

CONTRACTOR:

PROJECT :
AIR COOLER FOR
Toase-ehe Park Sanati Gohar Ofogh Petrochemical Co.
General Arrangement Drawing
1158-A01-1000-00

DWG. NO. EI027-DMF-VD-ME-DWG-003
SCALE : N.T.S. SIZE : A1 REV. : R4

Damafin thermal technology
Factory : Km 14 special Karaj road

THIS DOCUMENT OF A CONFIDENTIAL NATURE IS THE PROPERTY OF DAMAFIN AND SHALL NOT BE REPRODUCED IN ANY MANNER, NOR USED FOR ANY PURPOSE WHAT SO EVER, EXCEPT BY WRITTEN PERMISSION OF DAMAFIN.