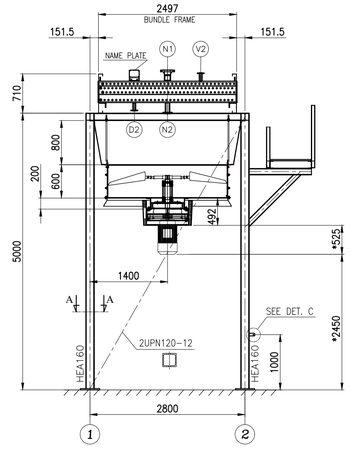

FRONT VIEW
CL. A,C

* THIS DIMENSION WILL BE FINALIZED AFTER APPROVED OF MOTOR DATA SHEET

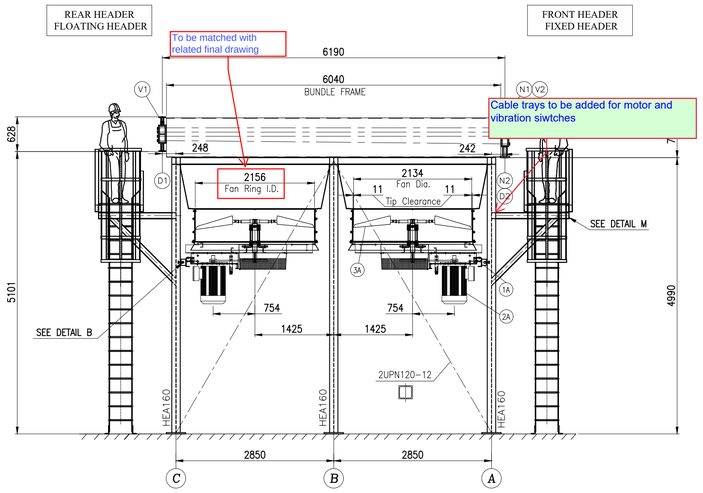

SIDE VIEW

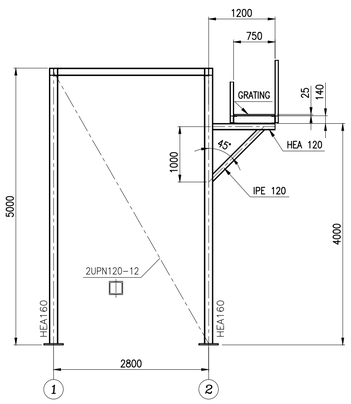

FRONT VIEW
CL. B

Please add the dimension from edge of header to beam ox in this view for verify the nozzle location in this view

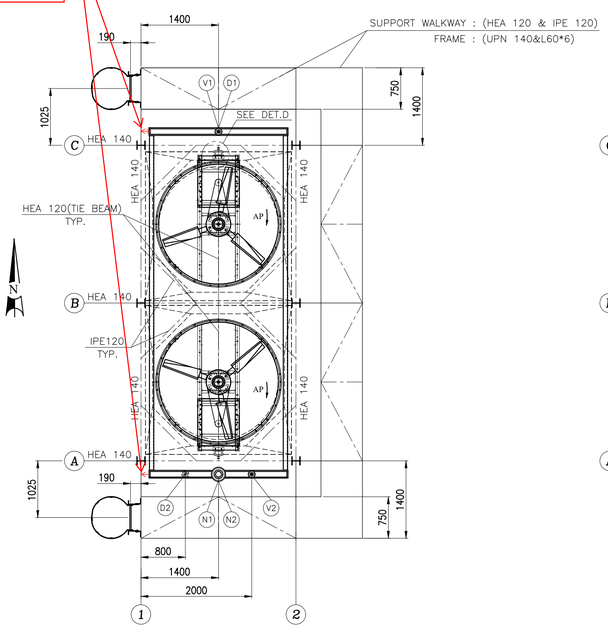

TOP VIEW

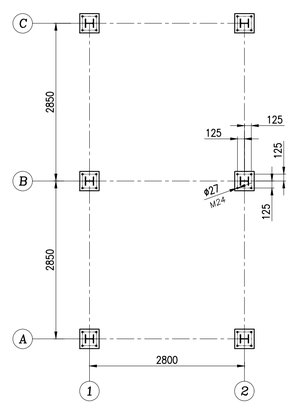

BASE PLATE VIEW

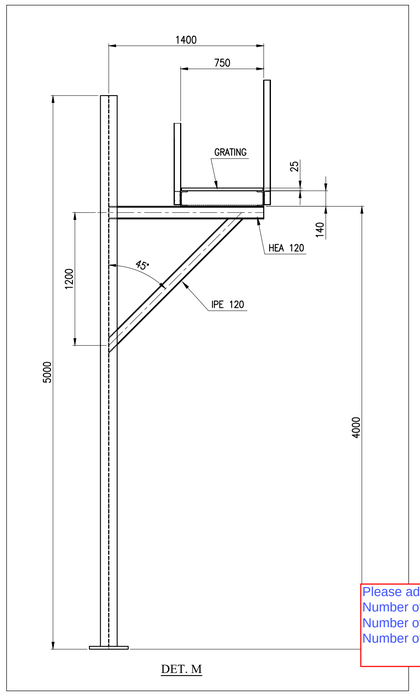

DET. M

Please add the following:
Number of units ----
Number of bay per unit -----
Number of bundle per bay ----

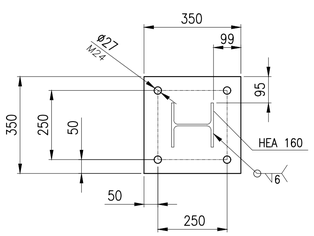

SEC. A-A
Thk.=25 mm
SC. 5:1

SETTING Bolt ,Nut and Washer Material:
Bolt: F1554-Gr.36
Nut: ASTM A563 Gr.DH
Washer: ASTM F436

EARTHING LUG

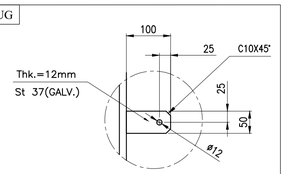

DET. C
* Only FOR COLUMNS : A1&C2

VIBRATION SWITCH

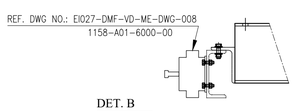

DET. B

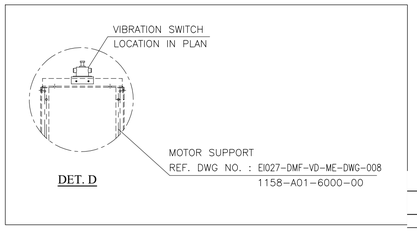

DET. D

Table 1. Weight of equipments For 1 Units (Total Units = 2)

	Total No in one Unit	Total Weight in one Unit (tonf)	Total No. for One Bay	Weight for One Bay (kgf)
Bundle Frame	1	0.865	1	865
Tube Bundle & Headers	1	2.635	1	2635
sum				**3500**
Water in Tubes & Headers	1	0.48	1	480
sum				**480**
Plenum	2	0.245	2	490
Fan Ring	2	0.13	2	260
Motor	2	0.07	2	140
Fan	2	0.0275	2	55
Speed Reducer	2	0.25	2	500
Machinery Mount	2	0.32	2	640
Fan Guard	2	0.0325	2	65
sum				**2150**
Total Weight of Main structure, Ladder for 1 Units				**5600**

Please specify the following weights:
Fabricated weight
Operation weight
Hydro test weight

TABLE: Joint Reactions

Joint	OutputCase	Fx	Fy	Fz
Text	Text	Kgf	Kgf	Kgf
A-1	DEAD_S	16.65	-45	861.98
A-1	DEAD	49.34	-158.83	1640.14
A-1	DEAD_OP	4.08	-14.37	92.37
A-1	DEAD_N	-1631.93	429.16	-2881.5
A-1	LIVE	3.34	25.54	1383.73
A-1	WX	25.43	265.25	-284.08
				538.88
				547.6
				764.17
				289.21
				529.78
				571.39
				80.54
				11.07
				55.27
				878.95
				02.18
				53E-13
				284.97
				21.21
				09216
A-2	EQY	-48.82	-0.38	-1465.12
A-2	EQXO	0.00889	92.7	0.18
A-2	EQYO	-98.54	-0.78	-2927.34
A-3	DEAD_S	16.65	45	861.98
A-3				1640.17
A-3				92.37
A-3				482.86
A-3				1383.73
A-3				284.08
A-3				-538.88
A-3				547.61
A-3				1764.07
A-3				2570.23
A-3				3529.6
A-3				-5134.3
B-1				482.68
B-1				983.92
B-1				81.45
B-1	DEAD_N	-670.87	1.33	2555.04
B-1	LIVE	-43.74	-6.51	64.14
B-1	WX	-205.58	0.8	-301.72
B-1	WY	-1.07	-57.15	406.51
B-1	SNOW	24.65	-1.56	193.87
B-1	EQX	-985.73	4.1	-1834.5
B-1	EQY	-51.12	-28.6	2619.38
B-1	EQXO	-1968.03	8.18	-3658.39
B-1	EQYO	-102.38	-57.85	5233.15
B-2	DEAD_S	-3.76E-15	-9.82	342.79
B-2	DEAD	-1.168E-10	-61.15	847.79
B-2	DEAD_OP	-1.602E-11	-8.01	77.09
B-2	DEAD_N	-0.0003857	-403.24	720.08
B-2	LIVE	8.844E-15	82.81	-147.91
B-2	WX	-45.16	2.887E-12	-5.156E-12
B-2	WY	-6.446E-14	-353.9	549.7
B-2	SNOW	-3.498E-11	3.21	131.34
B-2	EQX	0.02819	0.04229	-0.07544
B-2	EQY	0.006383	-1570.51	2804.88
B-2	EQXO	-0.2	0.08416	-0.15
B-2	EQYO	0.0007535	-3138.25	5603.81
B-3	DEAD_S	-34.11	-1.44	482.68
B-3	DEAD	-174.23	-2.24	983.9
B-3	DEAD_OP	-16.3	0.03128	81.45
B-3	DEAD_N	-670.07	1.26	1104.47
B-3	LIVE	43.74	-6.51	64.14
B-3	WX	-205.58	-0.8	301.72
B-3	WY	1.07	-57.15	406.51
B-3	SNOW	-24.65	-1.56	193.87
B-3	EQX	-985.8	-4.09	1834.58
B-3	EQY	-40.75	-28.68	1900.29
B-3	EQXO	-1968.16	-8.15	3658.54
B-3	EQYO	-81.36	-57.83	3796.07

Important:(Related to mechanical calculation document)
Please add MDMT calculation for all parts of bundle in mechanical calculation.

Important:(Related to tube bundle detail)
Please do the Impact test for all carbon steels , because min design temperature for air cooler is -45 c

As per Thermal and mechanical data sheet : "Bar"

GENERAL DATA	
ITEM NO.	–
DESIGN CODE BUNDLE/STRUCTURE	ASME SEC.VIII DIV.1(2017), API661(2013-7th EDITION)/Standard No. 2800
INLET PRESSURE/PRESSURE DRO. (ALLOWABLE/CALC.)	19.8 Barg /(0.1/0.016) Bar
DESIGN PRESSURE	22+F.V. (barg)
HYDROSTATIC TEST PRESSURE	38 (barg)
TEMPERATURE IN/OUT(TUBE SIDE)	73.5°C/56.32°C
DESIGN TEMPERATURE	120 °C
AIR INLET/OUTLET TEMPERATURE (AIR SIDE)	48 / 52.28 °C
MINIMUM DESIGN AMBIENT TEMPERATURE	5 °C
CORROSION ALLOWANCE	3 mm
ULTRASONIC TEST	YES(Spot)[See note 8]
RADIOGRAPHY	YES(Spot)[See note 8]
STRESS RELIEVING	YES
BARE/FINNED SURFACE PER UNIT	68.101/1579.2 m2
NUMBER OF BUNDLE PER BAY	1
NOZZLE SIZE(INLET/OUTLET/RATING/TYPE)	1x4"/1x2"/SCH.160/#300
PROCESS FLUID NAME	PROPANE
SERVICE	PROPANE
PASSES PER BUNDLE	4
FINNED-TUBES/BUNDLE	NO.140 TUBES , OD=25.4 MIN.W THK.=1.65, L=6096 mm
STEAM COIL	NO
LOUVER/TYPE	NO/–
PLENUM / FAN RING	FORCED TYPE/CONICAL L/D=0.05
VIBRATION SW	(FOR EACHFAN) MANUAL & ELECTRIC RESET
FAN SPECIFICA	2/7 Ft
BLADE NO./ MATERIAL	3/ALUMINIUM
AIR QUANTITY FOR FAN	26.879 m3/S
STATIC PRESSURE	102.95 Pa
AIR TEMPERATURE IN/OUT	48°C/52.28°C
SPEED REDUCER TYPE	V BELLT
REDUCTION RATIO	3.76
MOTOR TYPE	ELECTRIC-Exe
VOLTAGE/Freq./PHASES	400/50/3
RPM/KW	1500/7.5 Kw
S.P.L. 1m all side of fan:	<85 dB(A)1m all sides

Please add motor IP (55) to the table

To be matched with final electrical motor data sheet

To be matched with final related document.

100% (Nozzle to header)

100% (Flange to nozzle)

Where is note 8?

NOTES:

1) Loading Data
WIND :ASCE7-16,VELOCITY :100Km/h, EXPOSURE : C
Earthquake: Standard No. 2800,A=0.3,B=2.75,I=1.4,R=3.5,SOIL TYPE=IV
2) Fans
-100% AP — 100% manual As per thermal and mechanical data sheet it is not automatic pitch
3) Miscellaneous
– The Inlet Header Boxes Are Fixed In The Direction Of Fin Tubes, Refer To Table For The Lateral Displacement In Y Direction
– Flange Face Detail : ASME ANSI B16.5
4) All Dimensions Are In Millimeter Unless Otherwise Specified.
5) All Dimensions Tolerances Are According to API 661.(Figure 10)
6) Bolts which are used for fixing headers to side frame , on sliding side should be removed after erection.
7) PROTECTION(SEE Galvanizing Specification and Inspection Procedure: EI027-DMF-VD-QC-PRO-024

LOAD DEFINITION*

DEAD	DEAD LOAD(PLENUMS+FAN RINGS+FAN GUARDS+FAN+MOTOR+SPEED REDUCERS+GRATING+ +TUBE BUNDLE EMPTY)+HEADER WALK WAY
DEAD OP	WEIGHT OF LIQUID WITHIN EACH TUBE BUNDLE& STEAM COIL(WATER)
DEADS	SELF WEIGHT OF STRUCTURE
DEADN	NOZZEL LOAD
LIVE	WALKWAY LOAD 250 Kg/m2
EQX	SEISMIC LOAD DIR.X
EQY	SEISMIC LOAD DIR.Y
WX	WIND LOAD DIR.X
WY	WIND LOAD DIR.Y
SNOW	66 Kg/m2

* Further Definition Check the Steel Structure Calculation.Doc No.: EI027-DMF-VD-ST-CAL-004
1158-A01-0030-00

THE MAXIMUM ALLOWABLE MOMENTS AND FORCES PER EACH NOZZLE (IF LOADS ARE DIVIDED EQUALLY FOR NOZZLES ACCORDING TO 3xAPI 661(7.1.10.1)

SIZE	Fx(N)	Fy(N)	Fz(N)	Mx(N.m)	My(N.m)	Mz(N.m)
4"	10020	8010	10020	2430	3660	2430
2"	3060	3990	3060	450	720	450

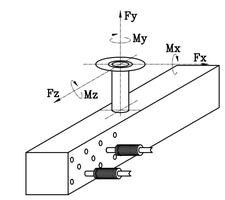

CONNECTIONS

NO.	REP.	QTY. PER BAY/ITEM	DIA	DESIGNATION
N1	INLET NOZZLE/FLANGE	1/1	4"	FLANGE ANSI B16.5,#300,WN,RF,SCH.160,SA-333 Gr.6 /SA-350 LF2 CL.1N
N2	OUTLET NOZZLE/FLANGE	1/1	2"	FLANGE ANSI B16.5,#300,LWN,RF,SA-350 LF2 CL.1N
V1&V2	VENT	2/2	1"	FLANGE ANSI B16.5,#300,LWN,SA-350 LF2 CL1 N
D1&D2	DRAIN	2/2	1"	FLANGE ANSI B16.5,#300,LWN,SA-350 LF2 CL1 N
1A	VIBRATION SWITCH	2/2	–	SEE FAN DRIVE ASSEMBLY DRAWING
2A	MOTOR(7.5Kw)	2/2	–	SEE FAN DRIVE ASSEMBLY DRAWING
3A	FAN	2/2	7ft	SEE FAN DRIVE ASSEMBLY DRAWING

LATERAL DISPLACEMENT OF HEADERS (DIRECTION X) INSIDE BUNDLE FRAME IN RELATION WITH EXPANSION FORCES ON NOZZLES (mm) (ACCORDING TO API661 7-1-1-2)

MAXIMUM DISPLACEMENT — INLET/OUTLET : ±9

* FOR MORE DETAILS FOR EACH COMPONENT OF AIR COOLER REFER TO BELOW DRAWING & DOCUMENTS.

Where is the related calculation? **please add the related calculation in mechanical calculation document**

TITLE	&DOC. NDOR DOCUMENT NO.	CLIENT DOCUMENT NO.
Tube Bundle Drawing	58-A01-2000-00	EI027-DMF-VD-ME-DWG-005
Bundle Frame Drawing	58-A01-2400-00	EI027-DMF-VD-ME-DWG-007
Fan Drive Assembly Drawing	1158-A01-6000-00	EI027-DMF-VD-ME-DWG-008
Fan Ring Drawing	1158-A01-5067-00 1158-A01-5167-00	EI027-DMF-VD-ME-DWG-009
Support Mechanism Drawing	1158-A01-6307-00	EI027-DMF-VD-ME-DWG-010
Plenum Drawing	1158-A01-5110-00	EI027-DMF-VD-ME-DWG-011
Steel Structure Drawing	1158-A01-1100-00	EI027-DMF-VD-ST-DWG-013
Header Walkway Drawing	1158-A01-1200-00	EI027-DMF-VD-ST-DWG-014
Ladder Drawing	1158-A01-1520-00	EI027-DMF-VD-ST-DWG-015
Surface Preparation and Painting Procedure for Air Cooler	1158-A01-QS01-00	EI027-DMF-VD-QC-PRO-024

REV	DATE	DESCRIPTION	DRAWN BY	CHECKED BY	APPROVED BY	FINAL APPROVED BY
R2						
R1						
R0	06/30/2024	ISSUED FOR APPROVAL	F.SZ	J.M.	J.B.L	A.GHZ

CLIENT:

CONTRACTOR:

PROJECT :
AIR COOLER FOR
Toase-ehe Park Sanati Gohar Ofogh Petrochemical Co.
General Arrangement Drawing
1158-A01-1000-00

Damafin thermal technology
Factory : Km 14 special Karaj road

DWG. NO.	EI027-DMF-VD-ME-DWG-003	
SCALE : N.T.S.	SIZE : A1	REV. : R0

THIS DOCUMENT OF A CONFIDENTIAL NATURE IS THE PROPERTY OF DAMAFIN AND SHALL NOT BE REPRODUCED IN ANY MANNER, NOR USED FOR ANY PURPOSE WHAT SO EVER, EXCEPT BY WRITTEN PERMISSION OF DAMAFIN.