Type: TLS-ADNPTV-3/4"-JT-L150

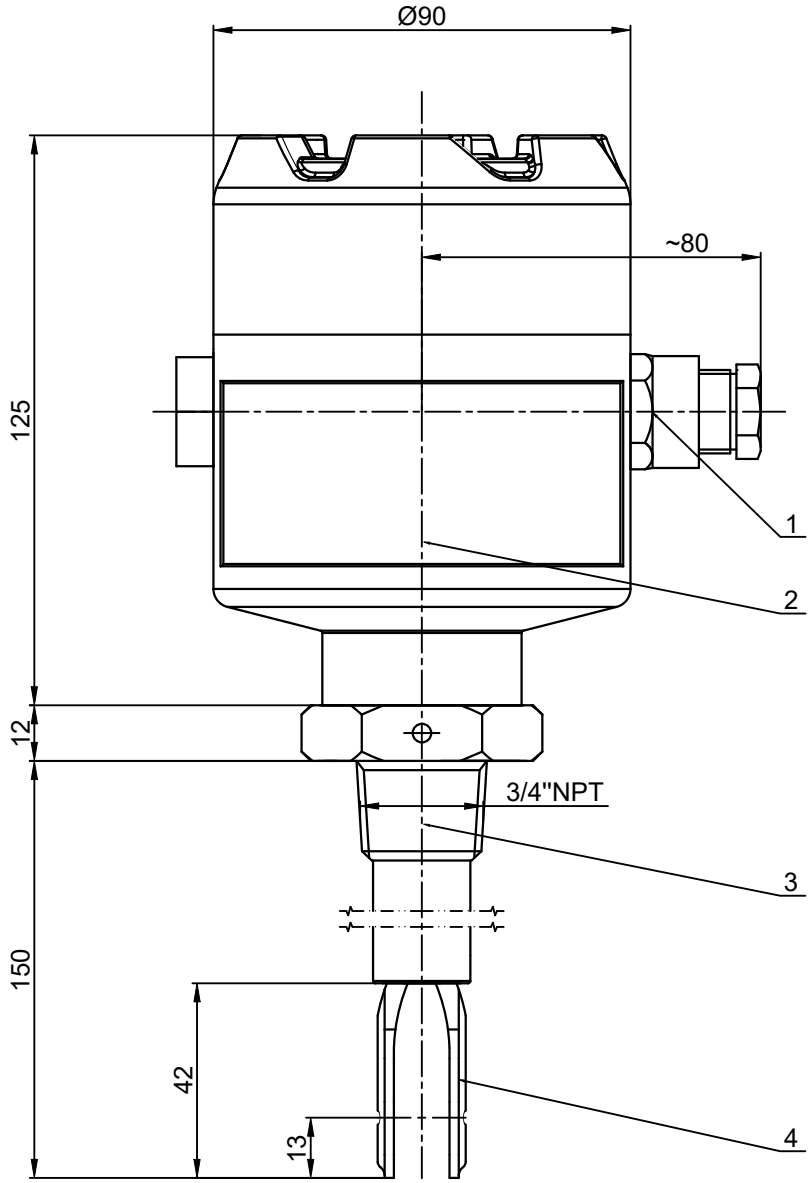

Tag No.：LS-RU0001A-01, LS-RU0001B-01

Design temperature （℃）	Design pressure （MPa）
5...100	2.2

Signal Output：DPDT

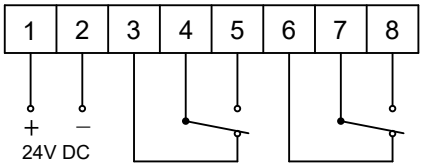

Contact rating: AC 220V 5A, DC 30V 5A

Ex-proof: Ex db IIC T6...T3 Ga/Gb (IECEx)

序号 No.	数量 Quantity	名 称 Item	规 格 Specifications	材料 Materials	备注 Remarks
4	1	Tuning fork	42mm	SS 316L	
3	1	Process connection	3/4" NPT ASME B1.20.2M	SS 316L	
2	1	Terminal box	Ø90×123mm	Aluminum alloy	
1	1	Electrical connection	M20×1.5	/	

上海柯普乐自动化仪表有限公司
SHANGHAI KSR-KUEBLER Automation instruments Co.Ltd.

供货确认图
Supply product affirmed for drawing

未注尺寸公差按GB/T 19804或ISO 13920中C级；
Dimensions without tolerances GB/T 19804 or ISO 13920 of C;

单位：Unit: mm　幅 面：Paper size: A4

	日期(Date)	姓名(Name)
绘图 Drwn.	2024.09.27	满建楠
审核 Chkd.	2024.09.27	于洁

TLS

音叉液位开关
Tuning fork level switch

标记 Rev.	更改版本 Change version	日期 Date
a）	Add Tag No.	2024.11.8

KSR KUEBLER A division of the WIKA group

图号(Drawing No.)：
Q20240927.00-01B

本图有效期为自绘图之日起1年内为有效期；
This drawing is valid in 1 year from drawn date;

Copying of this document, and giving it to others and the use or communication of the contents thereof, are forbidden without express authority. Offenders are liable to the payment of damages. All rights are reserved in the event of the grant of a patent or the registration of a utility model or design.

类 别
Type

2